E-flite®
ADVANCING ELECTRIC FLIGHT

RV-7 1.1m

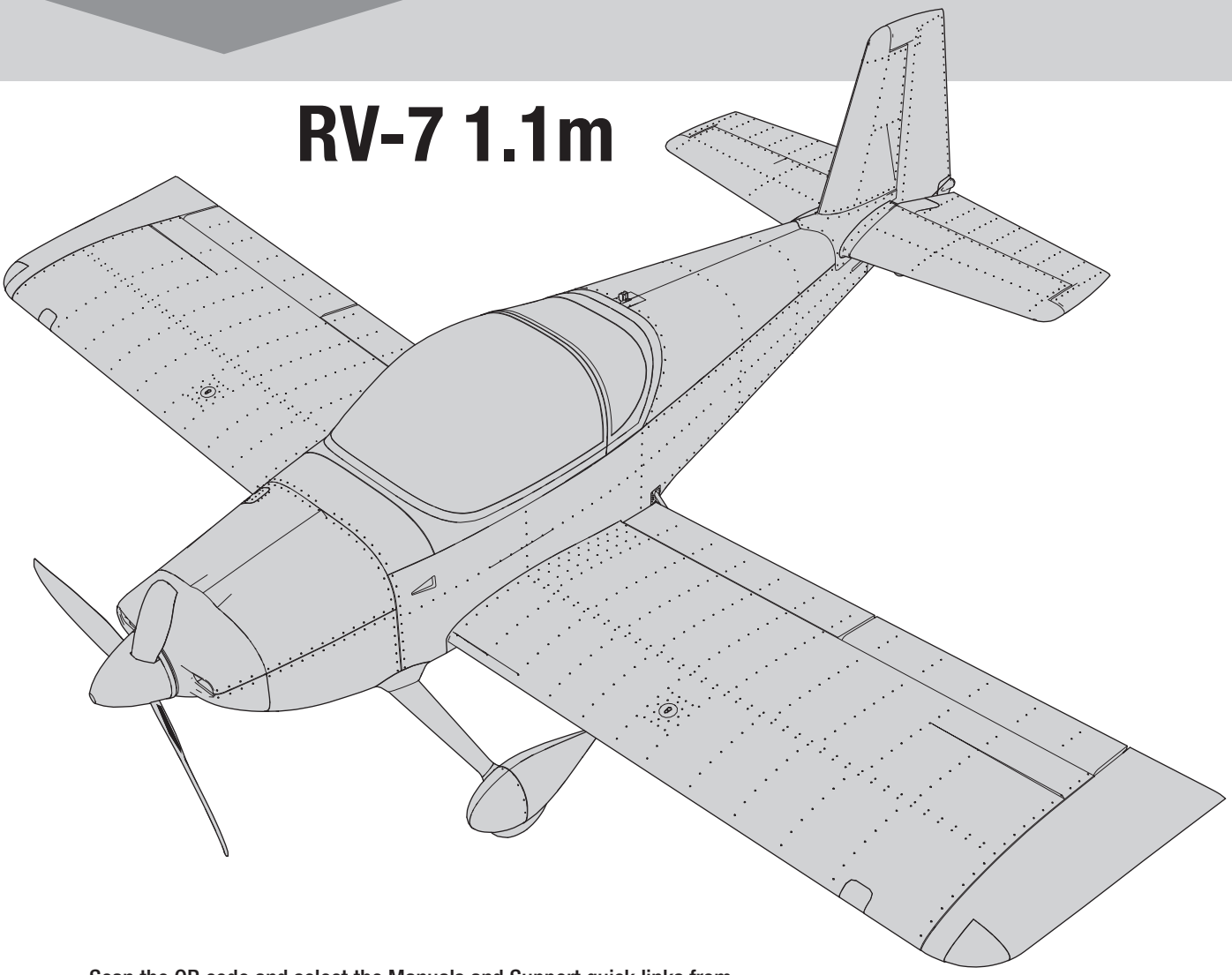

Scan the QR code and select the Manuals and Support quick links from the product page for the most up-to-date manual information.
Scannen Sie den QR-Code und wählen Sie auf der Produktseite die Quicklinks Handbücher und Unterstützung, um die aktuellsten Informationen zu Handbücher.
Scannez le code QR et sélectionnez les liens rapides Manuals and Support sur la page du produit pour obtenir les informations les plus récentes sur le manuel.
Scannerizzare il codice QR e selezionare i Link veloci Manuali e Supporto dalla pagina del prodotto per le informazioni manuali più aggiornate.

BNF® BASIC

EFL01850

PNP® PLUG-N-PLAY®

EFL01875

Instruction Manual
Bedienungsanleitung
Manuel d'utilisation
Manuale di Istruzioni

HORIZON® HOBBY

NOTICE

All instructions, warranties and other collateral documents are subject to change at the sole discretion of Horizon Hobby, LLC. For up-to-date product literature, visit horizonhobby.com or towerhobbies.com and click on the support or resources tab for this product.

MEANING OF SPECIAL LANGUAGE

The following terms are used throughout the product literature to indicate various levels of potential harm when operating this product:
WARNING: Procedures, which if not properly followed, create the probability of property damage, collateral damage, and serious injury OR create a high probability of superficial injury.
CAUTION: Procedures, which if not properly followed, create the probability of physical property damage AND a possibility of serious injury.
NOTICE: Procedures, which if not properly followed, create a possibility of physical property damage AND little or no possibility of injury.

WARNING: Read the ENTIRE instruction manual to become familiar with the features of the product before operating. Failure to operate the product correctly can result in damage to the product, personal property and cause serious injury.
This is a sophisticated hobby product. It must be operated with caution and common sense and requires some basic mechanical ability. Failure to operate this Product in a safe and responsible manner could result in injury or damage to the product or other property. This product is not intended for use by children without direct adult supervision. Do not use with incompatible components or alter this product in any way outside of the instructions provided by Horizon Hobby, LLC. This manual contains instructions for safety, operation and maintenance. It is essential to read and follow all the instructions and warnings in the manual, prior to assembly, setup or use, in order to operate correctly and avoid damage or serious injury.

AGE RECOMMENDATION: Not for children under 14 years. This is not a toy.

Safety Precautions and Warnings

As the user of this product, you are solely responsible for operating in a manner that does not endanger yourself and others or result in damage to the product or the property of others.

- Always keep a safe distance in all directions around your model to avoid collisions or injury. This model is controlled by a radio signal subject to interference from many sources outside your control. Interference can cause momentary loss of control.
- Always operate your model in open spaces away from full-size vehicles, traffic and people.
- Always carefully follow the directions and warnings for this and any optional support equipment (chargers, rechargeable battery packs, etc.).
- Always keep all chemicals, small parts and anything electrical out of the reach of children.
- Always avoid water exposure to all equipment not specifically designed and protected for this purpose. Moisture causes damage to electronics.
- Never place any portion of the model in your mouth as it could cause serious injury or even death.
- Never operate your model with low transmitter batteries.
- Always keep aircraft in sight and under control.
- Always use fully charged batteries.
- Always keep transmitter powered on while aircraft is powered.
- Always remove batteries before disassembly.
- Always keep moving parts clean.
- Always keep parts dry.
- Always let parts cool after use before touching.
- Always remove batteries after use.
- Always ensure failsafe is properly set before flying.
- Never operate aircraft with damaged wiring.
- Never touch moving parts.

WARNING AGAINST COUNTERFEIT PRODUCTS: If you ever need to replace your Spektrum receiver found in a Horizon Hobby product, always purchase from Horizon Hobby, LLC or a Horizon Hobby authorized dealer to ensure authentic high-quality Spektrum product. Horizon Hobby, LLC disclaims all support and warranty with regards, but not limited to, compatibility and performance of counterfeit products or products claiming compatibility with DSM or Spektrum technology.

Quick Start Information			
Transmitter Setup	1. Blank (Acro) Model		
	2. Wing Type: 1 Aileron, 1 Flap		
	3. Servo Reversing: All Channels Normal		
	4. Travel Adjust (All Surfaces): 100%		
Dual Rates*		**High Rate**	**Low Rate**
	Aileron	▲ = 16mm ▼ = 16mm	▲ = 12mm ▼ = 12mm
	Elevator	▲ = 14mm ▼ = 14mm	▲ = 10mm ▼ = 10mm
	Rudder	▶ = 32mm ◀ = 32mm	▶ = 22mm ◀ = 22mm
Flap Travel	Half ▼ = 15mm		Full ▼ = 25mm
Flap/Elevator Compensation	-2%		2%
Exponential		**High Rate**	**Low Rate**
	Aileron	10%	5%
	Elevator	10%	5%
	Rudder	10%	5%
Center of Gravity (CG)	56mm back from the leading edge of the wing		
Flight Timer Setting	5 minutes		

Specifications

	BNF BASIC	PNP PLUG-N-PLAY
Motor: 3536 Brushless Outrunner, 850Kv, 14 pole, (SPMXAM1800)	Installed	Installed
ESC: Avian™ 45 Amp Brushless Smart-Lite ESC, 3S-4S, IC3® (SPMXAE45A)	Installed	Installed
Servos: Aileron (2), Elevator, Rudder, Flap (2): 9-gram digital servo, 7in (180mm) servo lead (SPMSA334)	Installed	Installed
Receiver: Spektrum™ AR631 DSMX 6-Channel AS3X® Telemetry Receiver (SPMAR631)	Installed	Required to Complete
Recommended Battery: 14.8V 2200mAh 30C or higher 4S LiPo with IC3®/EC3™ connector	Required to Complete	Required to Complete
Recommended Battery Charger: 3-4-cell Li-Po battery balancing charger	Required to Complete	Required to Complete
Recommended Transmitter: 6+ channel, Full-Range 2.4GHz with Spektrum™ DSM2®/DSMX® technology and adjustable dual rates	Required to Complete	Required to Complete

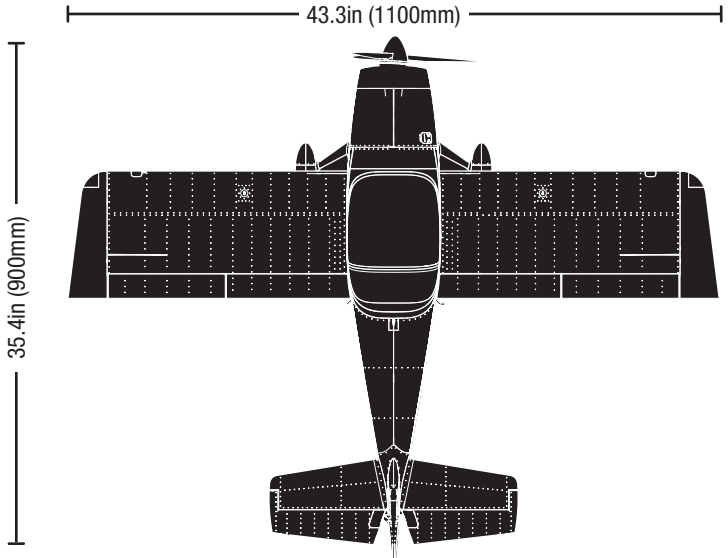

Without battery: 41.6oz (1.18kg)
With 4S 2200mAh battery: 49.8oz (1.41kg)

Box Contents

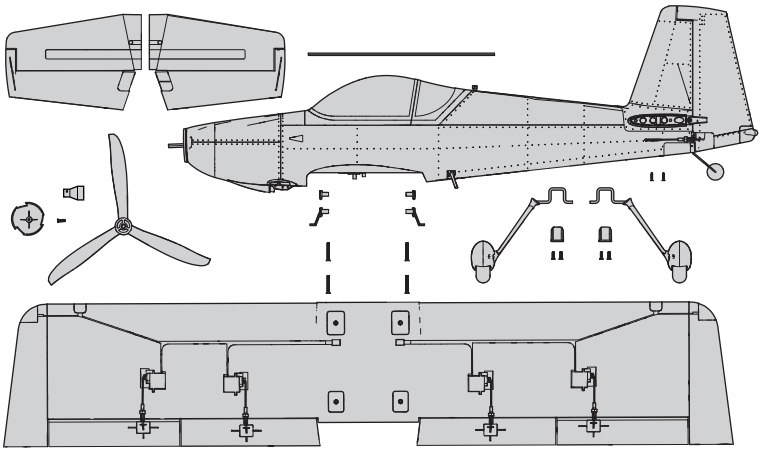

Table of Contents

Safety Precautions and Warnings 2
Specifications 3
Box Contents 3
Table of Contents 3
SAFE® Select Technology *BNF* 4
Preflight 4
Transmitter Setup *BNF* 4
Model Assembly 5
Receiver Selection and Installation *PNP* 8
Step Installation (optional) 8
General Binding Tips and Failsafe *BNF* 9
Transmitter and Receiver Binding / Enabling and Disabling SAFE Select *BNF* 9
Control Surface Centering 10
Battery Installation and ESC Arming 10
Integrated ESC Telemetry 11
SAFE® Select Switch Designation *BNF* 11
Center of Gravity (CG) 12
Control Surface Direction 12
AS3X® Control Response Test *BNF* 13
Dual Rates and Control Throws 13
Propeller Installation 13
Flying Tips and Repairs 14
SAFE Select Flying Tips *BNF* 14
In Flight Trimming *BNF* 15
Post Flight 15
Motor Service 15
Troubleshooting Guide AS3X *BNF* 15
Troubleshooting Guide 16
Replacement Parts 17
AMA National Model Aircraft Safety Code 17
Recommended Items 17
Optional Items 17
Limited Warranty 18
Contact Information 18
FCC Information 19
IC Information 19
Compliance Information for the European Union 19

If you own this product, you may be required to register with the FAA.
For up-to-date information on how to register with the FAA, please visit https://registermyuas.faa.gov/.
For additional assistance on regulations and guidance on UAS usage, visit knowbeforeyoufly.org/.

SAFE® Select Technology *BNF*

The BNF Basic version of this airplane includes SAFE Select technology which can offer an extra level of protection in flight. Use the following instructions to make the SAFE Select system active and assign it to a switch. When enabled, SAFE Select prevents the airplane from banking or pitching past predetermined limits, and automatic self-leveling keeps the airplane flying in a straight and level attitude when the aileron, elevator and rudder sticks are at neutral.
SAFE Select is enabled or disabled during the bind process, or it can be enabled via Forward Programming. When the airplane is bound with SAFE Select enabled, a switch can be assigned to toggle SAFE Select ON or OFF. AS3X® technology remains active at all times.

SAFE Select can be configured three ways:
- SAFE Select Off: Always in AS3X mode
- SAFE Select On with no switch assigned: Always in SAFE Select mode
- SAFE Select On with a switch assigned

Preflight

1. Remove and inspect contents.
2. Read this instruction manual thoroughly.
3. Charge the flight battery.
4. Setup Transmitter using transmitter setup chart.
5. Fully assemble the airplane.
6. Install the flight battery in the aircraft (once it has been fully charged).
7. Check the Center of Gravity (CG).
8. Bind the aircraft to your transmitter.

9. Make sure linkages move freely.
10. Perform the Control Direction Test with the transmitter.
11. Perform the AS3X Control Direction Test with the aircraft.
12. Adjust flight controls and transmitter.
13. Perform a radio system Range Test.
14. Install the propeller and spinner.
15. Find a safe open area to fly.
16. Plan flight for flying field conditions.

Transmitter Setup *BNF*

Dual Rates

Take first flights in Low Rate. For landings, use high rate elevator.

NOTICE: To ensure AS3X® technology functions properly, do not lower rate values below 50%. If lower rates are desired, manually adjust the position of the pushrods on the servo arm.

NOTICE: If oscillation occurs at high speed, refer to the Troubleshooting Guide for more information.

Exponential

After first flights, you may adjust expo in your transmitter.

Telemetry Setup

See the Telemetry Setup table after binding. In order for the ESC and battery information to auto-populate in your transmitter's telemetry menu, you must begin telemetry setup with the aircraft bound and connected.

Computerized Transmitter Setup

Start all transmitter programming with a blank ACRO model (perform a model reset), then name the model.	
Set Dual Rates to	HIGH 100% LOW 70%
Set Servo Travel to	100%
Set Throttle Cut to	-130%
DXS	Refer to spektrumrc.com for the appropriate download setup
DX6i	1. Go to the SETUP LIST MENU 2. Set MODEL TYPE: ACRO 3. Go to ADJUST LIST MENU 4. Set FLAPS: Norm ↓-100 Flap Elev 0 LAND ↑45 Flap Elev 2
DX7S DX8	1. Go to the SYSTEM SETUP 2. Set MODEL TYPE: AIRPLANE 3. Set WING TYPE: 1 AIL 1 FLAP 4. Go to the FUNCTION LIST 5. Set FLAP SYSTEM: Choose Flap NORM: -100% FLAP MID: 0% FLAP -2% Elevator LAND: 45% FLAP 2% Elevator SPEED 2.0S: SWITCH = FLAP
DX6e, DX8e DX6, DX7, DX8 (Gen2) DX9, DX18, DX20 iX12, iX20 NX6, NX8, NX10	1. Go to the SYSTEM SETUP (Model Utilities) 2. Set MODEL TYPE: AIRPLANE 3. Set AIRCRAFT TYPE (Model Setup, Aircraft Type): WING: 1 AIL 1 FLAP 4. Go to the FUNCTION LIST (Model Adjust) 5. Set FLAP SYSTEM: SELECT SWITCH D: POS 0: -100% FLAP* POS 1: 0% FLAP* -2% Elevator POS 2: 45% FLAP* 2% Elevator SPEED 2.0

* Flap programming values may vary slightly. For your initial flights use the recommended flap travel settings provided and adjust the flap travel to your preference on subsequent flights.

WARNING: Before proceeding, remove the spinner and propeller from the motor shaft. Never attempt to program the radio components, assemble the aircraft or perform maintenance of any kind without removing the propeller or engaging throttle cut. Serious injury could result if the motor starts inadvertently with the propeller still attached.

Model Assembly

Horizontal Stabilizer Installation

1. Slide the horizontal stabilizer joiner into the hole in the rear of the fuselage.
2. Flex each of the elevators up and down several times to ensure the hinge allows the elevators to move freely.
3. Install the two piece (left and right) horizontal stabilizer as shown. Ensure the control horn faces down, and the elevator joiner engages.
4. Secure the horizontal stabilizer pieces in place using the two included 2.6 x 12 mm self tapping screws.

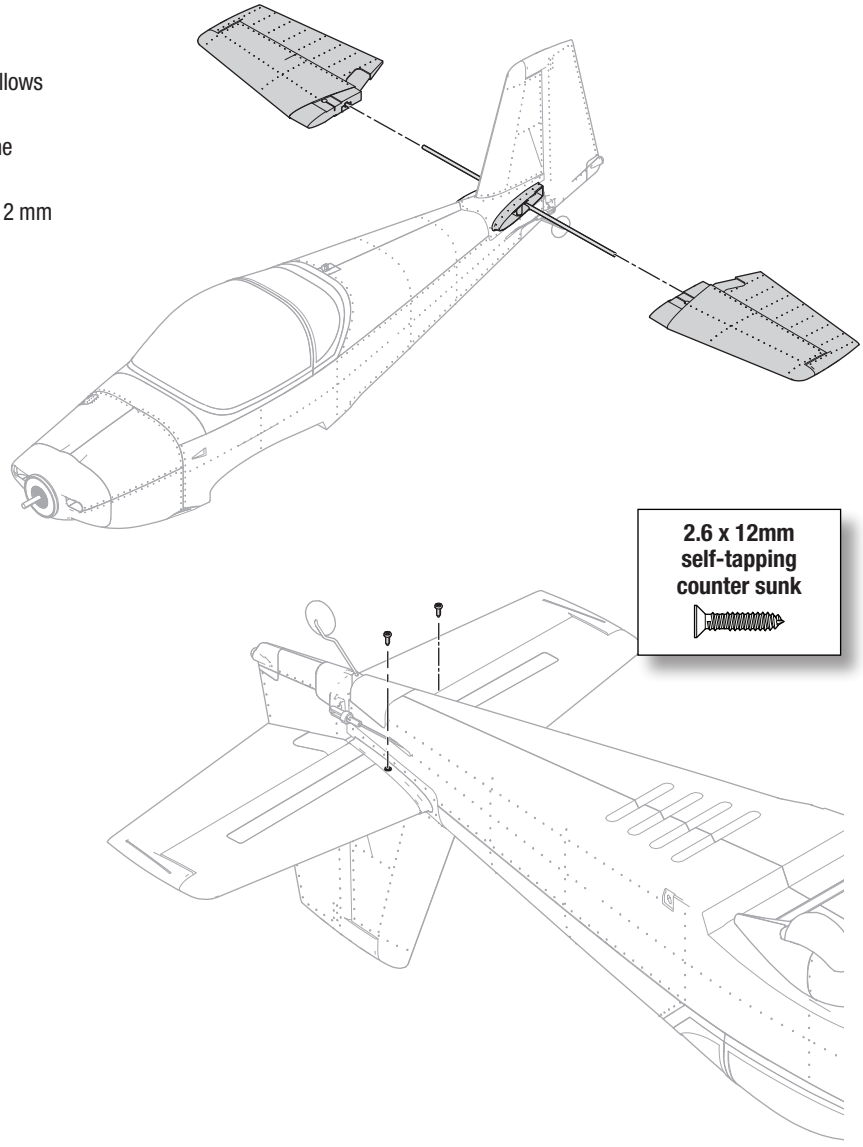

Connect the Pushrods to the Control Surfaces

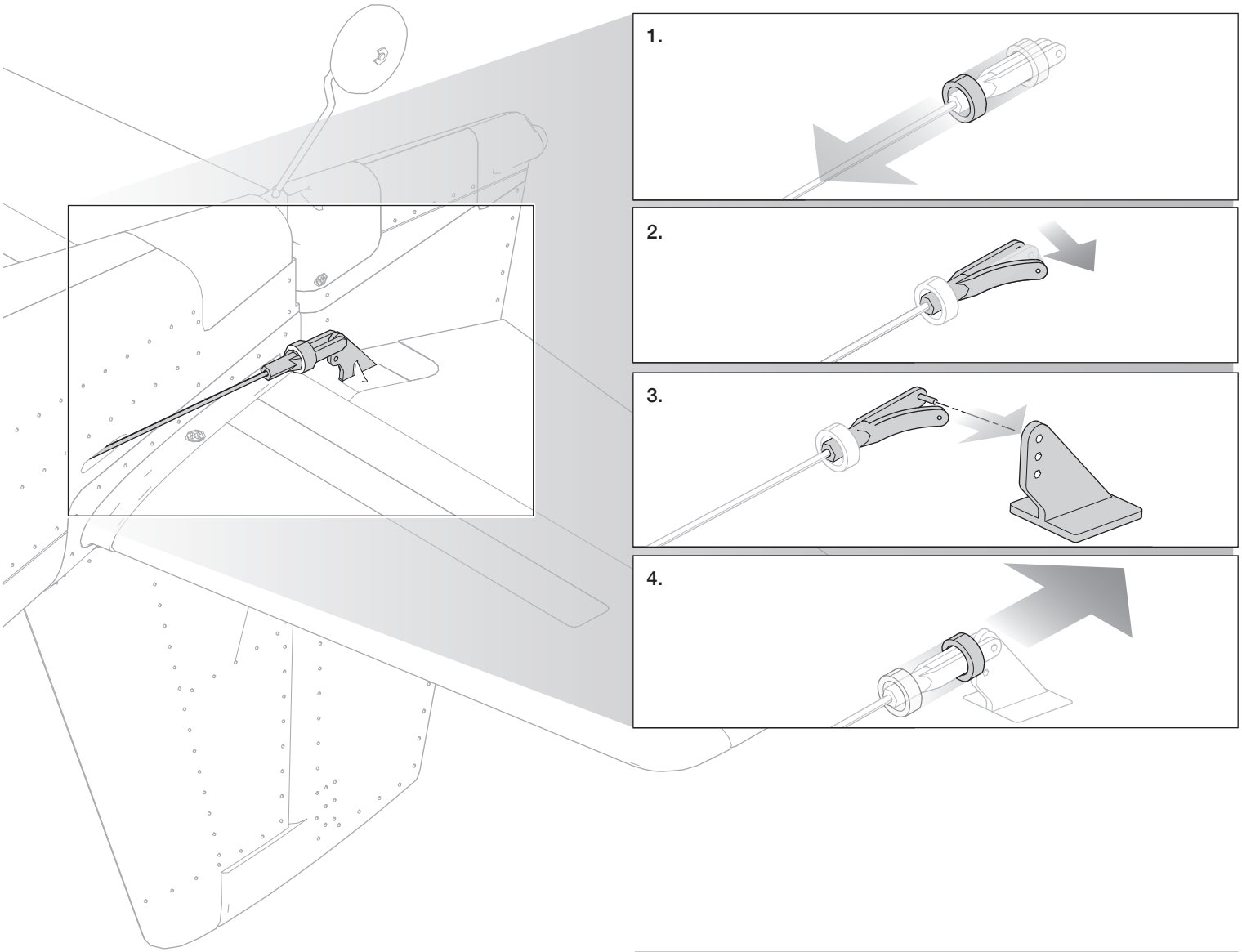

Control Horn and Servo Arm Settings

The table to the right shows the factory settings for the control horns and servo arms. Fly the aircraft at factory settings before making changes.

NOTICE: If control throws are changed from the factory settings, the AR631 gain values may need to be adjusted. Refer to the Spektrum AR631 manual for adjustment of gain values.

After flying, you may choose to adjust the linkage positions for the desired control response. See the table to the right.

More control throw	Less control throw
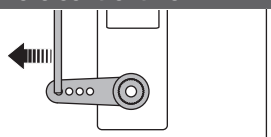	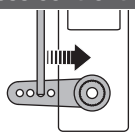
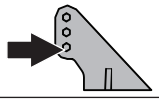	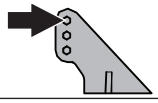

	Horns	Arms
Elevator	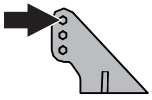	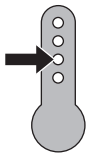
Ailerons	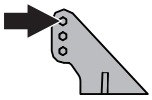	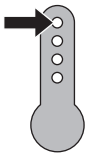
Rudder	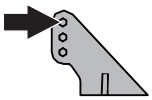	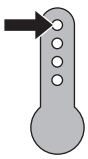
Flaps	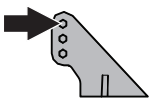	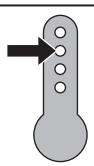

Landing Gear Installation

Mount the Landing Gear to the Fuselage

1. Determine the left and right side inserts. There is a left and right indicator marked on the inside of the insert.
2. Insert the landing gear and inserts into the slots in the fuselage and secure using two M3 x 10mm screws for each landing gear assembly, as shown.

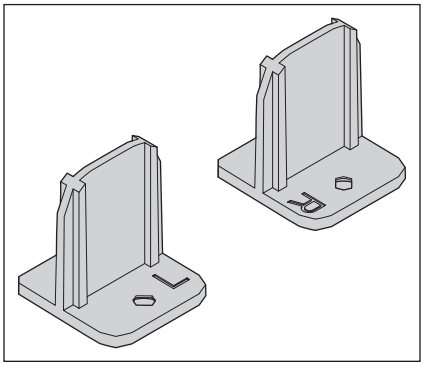

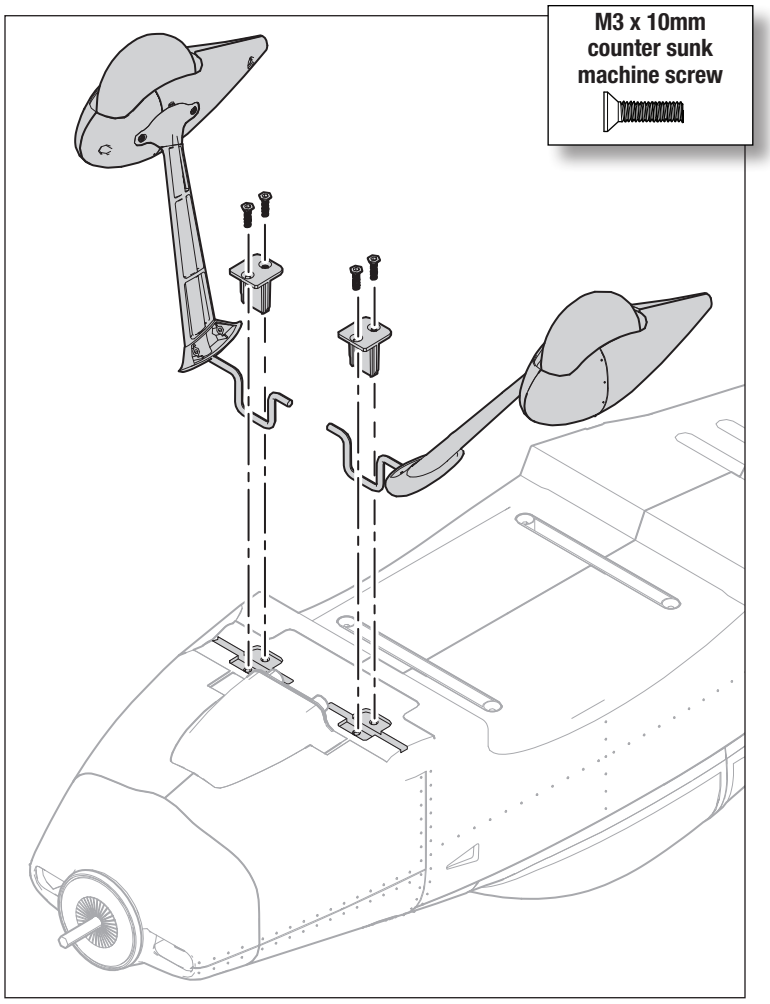

Wing Installation

Mount the Wing to the Fuselage

1. Align the wing with the wing saddle on the fuselage.
2. Locate the holes for the M3 x 20mm wing screws and begin to thread the screws into place.
3. Press the wing into place, being careful to keep it aligned correctly so the hands-free connectors fully seat.
4. Tighten the wing screws.

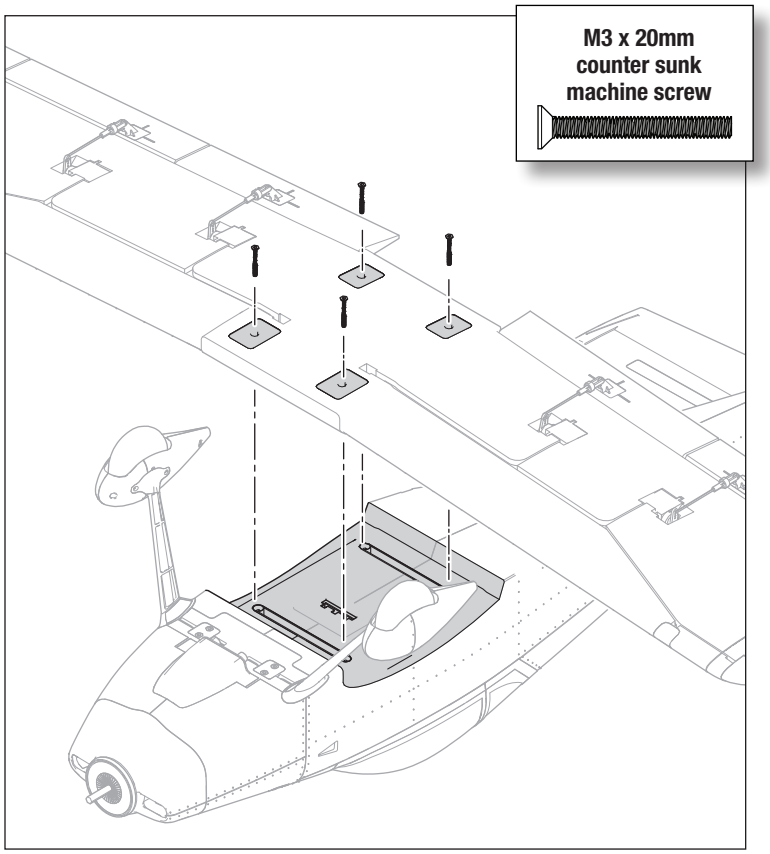

Receiver Selection and Installation *PNP*

The recommended receiver for this aircraft is the Spektrum AR631. If you choose to install a different receiver, ensure that it is at least a 6-channel full range receiver. Refer to the manual of your chosen receiver for correct installation and operation instructions.

AR631 Installation

1. Connect the servos to the their respective ports in the receiver using the table at the right.
2. Using high quality double-sided servo tape,(not included) mount the receiver to the flat area behind the battery compartment, as shown. The receiver should be mounted in the orientation shown, parallel to the length of the fuselage, with the label facing up and the servo ports facing the front of the aircraft. The orientation of the receiver is critical for all AS3X and SAFE technology setups.

CAUTION: Incorrect installation of the receiver could cause a crash.

AR631 Port Assignments

BND/PRG = BIND/Lights

1 = Throttle	**4 = Rudder**
2 = Ailerons	**5 = N/A**
3 = Elevator	**6 = Flaps**

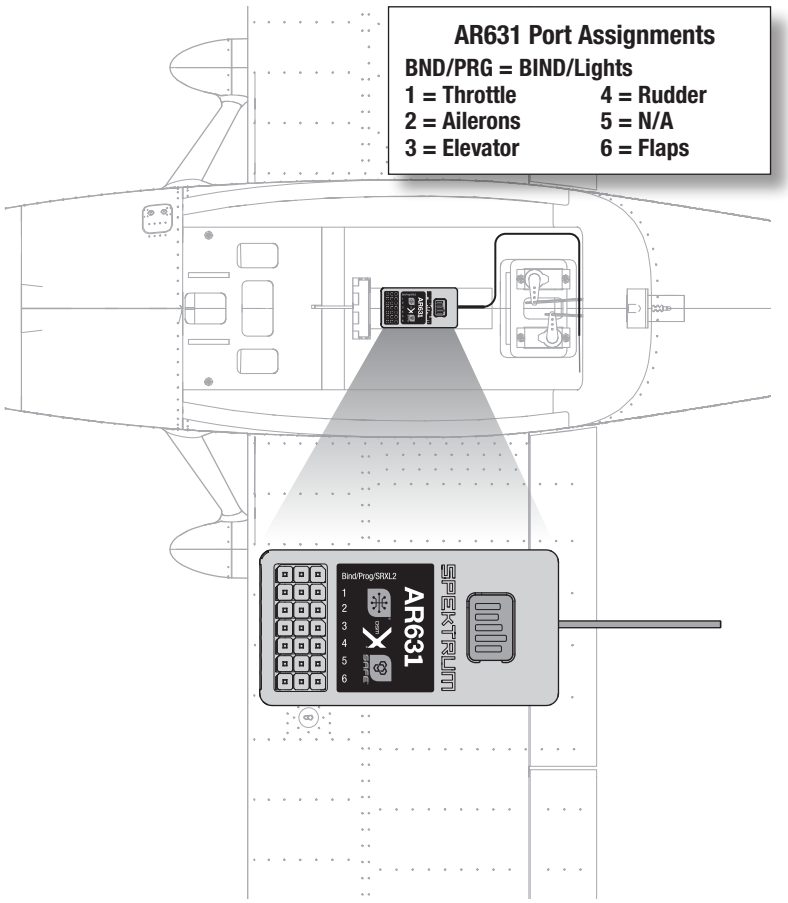

Antenna Installation

The AR631 receiver has a coaxial style antenna. We recommend installing the antenna as shown in the illustration and as far as possible from metal, batteries, or carbon fiber to maximize signal reception performance.

NOTICE: Do not cut, kink, or modify the antenna. Damage to the coaxial portion of an antenna will reduce the performance of the antenna. Shortening or cutting off the 31mm tip will reduce the range.

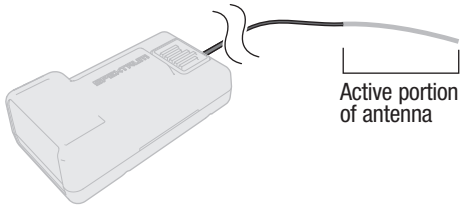

Step Installation (optional)

The aircraft includes step(s) detail and/or plug(s) which can be used instead.

1. Select either the steps or plugs.
2. Apply a small amount of medium CA glue and press into place.

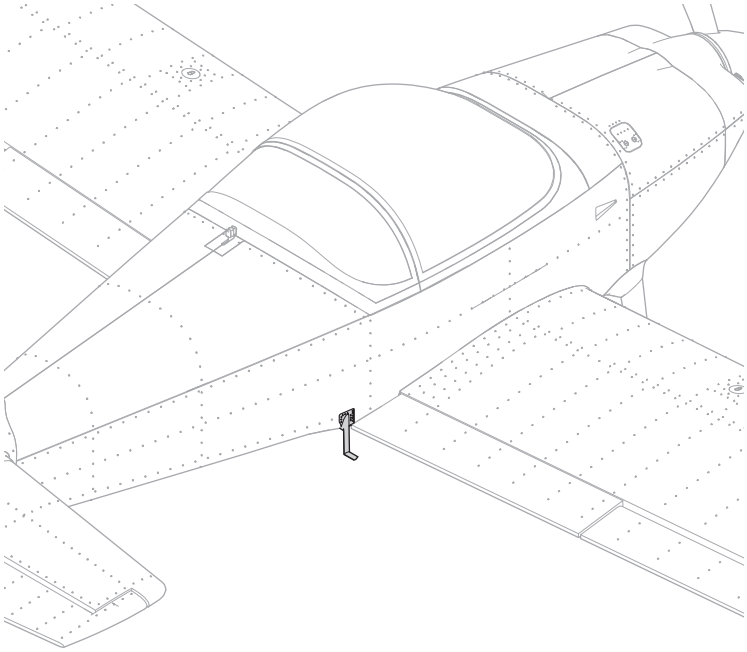

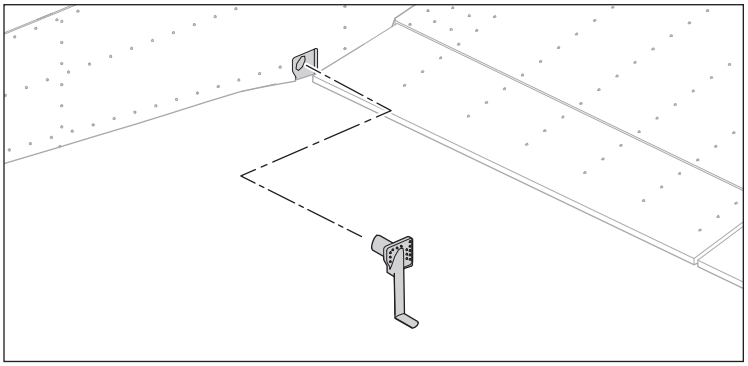

OR

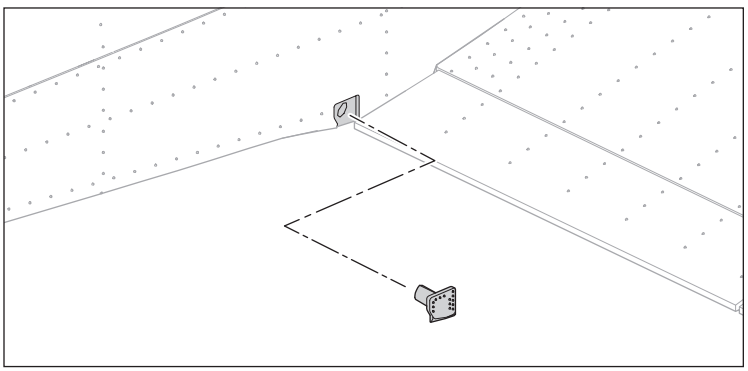

General Binding Tips and Failsafe *BNF*

- The included receiver has been specifically programmed for operation of this aircraft. Refer to the receiver manual for correct setup if the receiver is replaced.
- Keep away from large metal objects while binding.
- Do not point the transmitter's antenna directly at the receiver while binding.
- The orange LED on the receiver will flash rapidly when the receiver enters bind mode.
- Once bound, the receiver will retain its bind settings for that transmitter until you re-bind.
- If the receiver loses transmitter communication, the failsafe will activate. Failsafe moves the throttle channel to low throttle. Pitch and roll channels move to actively stabilize the aircraft in a descending turn.
- If problems occur, refer to the troubleshooting guide or if needed, contact the appropriate Horizon Product Support office.

Transmitter and Receiver Binding / Enabling and Disabling SAFE Select *BNF*

The BNF Basic version of this airplane includes SAFE Select technology, enabling you to choose the level of flight protection. SAFE mode includes angle limits and automatic self leveling. AS3X mode provides the pilot with a direct response to the control sticks. SAFE Select is enabled or disabled during the bind process.
With SAFE Select disabled the aircraft is always in AS3X mode. With SAFE Select enabled the aircraft will be in SAFE Select mode all the time, or you can assign a switch to toggle between SAFE Select and AS3X modes.
Thanks to SAFE Select technology, this aircraft can be configured for full-time SAFE mode, full-time AS3X mode, or mode selection can be assigned to a switch.

IMPORTANT: Before binding, read the transmitter setup section in this manual and complete the transmitter setup table to ensure your transmitter is properly programmed for this aircraft.

IMPORTANT: Move the transmitter flight controls (rudder, elevators, and ailerons) and the throttle trim to neutral. Move the throttle to low before and during binding. This process defines the failsafe settings.

You can use either the bind button on the receiver case or the conventional bind plug to complete the binding and SAFE Select process.

SAFE Select can also be activated via Forward Programming in compatible transmitters.

Using The Bind Button...

To Enable SAFE Select

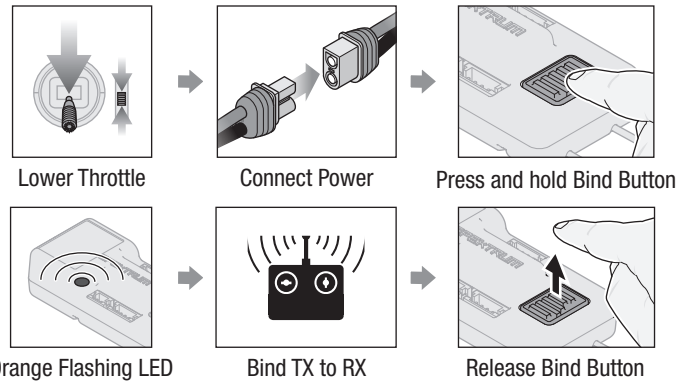

SAFE SELECT ENABLED: The control surfaces cycle back and forth **twice** with a slight pause at neutral position every time the receiver is powered on.

To Disable SAFE Select

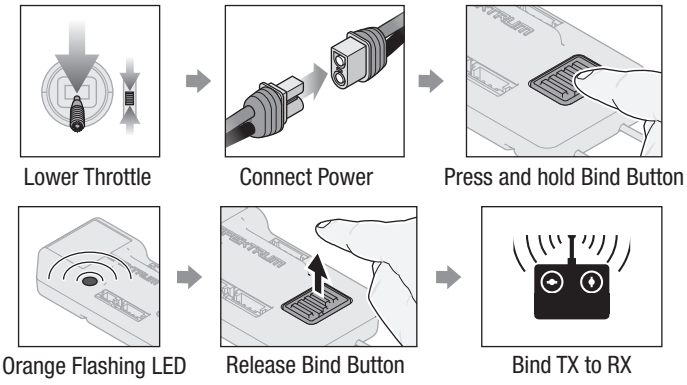

SAFE SELECT DISABLED: The control surfaces cycle back and forth **once** every time the receiver is powered on.

Using The Bind Plug...

To Enable SAFE Select

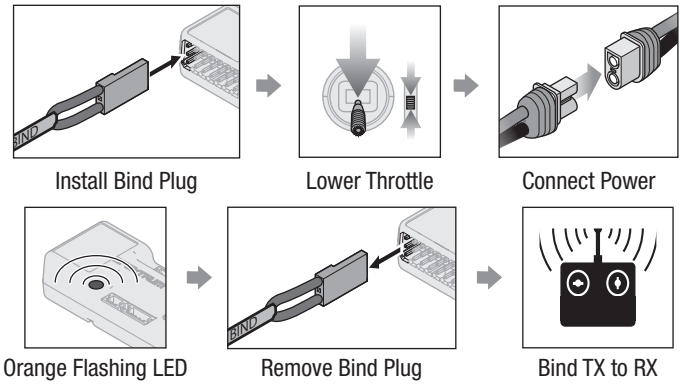

SAFE SELECT ENABLED: The control surfaces cycle back and forth **twice** with a slight pause at neutral position every time the receiver is powered on.

To Disable SAFE Select

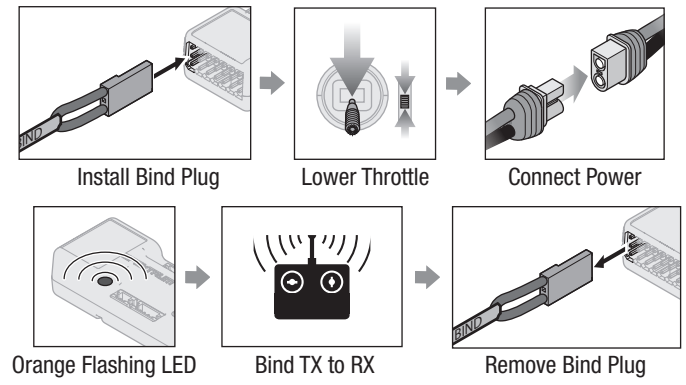

SAFE SELECT DISABLED: The control surfaces cycle back and forth **once** every time the receiver is powered on.

SAFE Select can also be activated via Forward Programming in compatible transmitters.

Control Surface Centering

After assembly and transmitter setup, confirm that the control surfaces are centered. The model must be powered, bound to the transmitter in AS3X mode, with the throttle left at zero. When enabled, SAFE mode is active at power up. AS3X mode is activated when the throttle is raised above 25% for the first time after being powered on. It is normal for the control surfaces to respond to aircraft movement if the aircraft is in AS3X or SAFE modes.

1. Verify the trims and subtrims on your transmitter are zero
2. Power up the model in AS3X mode and leave the throttle at zero
3. Look at the tip of each control surface and verify it is mechanically centered.
4. If adjustment is required, turn the clevis on the linkage to change the length of the linkage between the servo arm and the control horn.

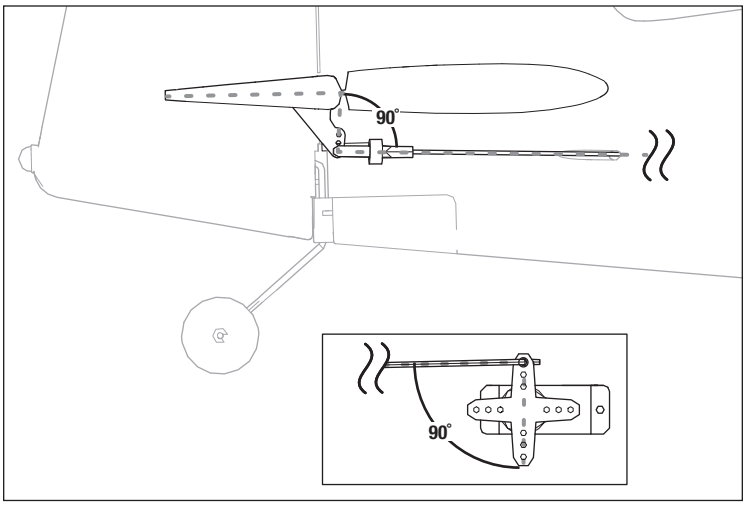

Battery Installation and ESC Arming

The Spektrum™ Smart 2200mAh 4S 50C Li-Po battery (SPMX22004S50) is recommended for best performance.
Refer to the Optional Parts List for other recommended batteries. If using a battery other than those listed, the battery should be within the range of capacity, dimensions and weight of the Spektrum Li-Po battery pack to fit in the fuselage. Be sure the model balances at the recommended CG before flying.

WARNING: Always keep hands away from the propeller. When armed, the motor will turn the propeller in response to any throttle movement. If your transmitter supports it, always engage throttle cut before approaching the aircraft any time a battery is connected.

1. Lower the throttle and throttle trim to the lowest settings. Power on the transmitter, then wait 5 seconds.
2. Push back on the hatch release button behind the canopy and lift up on the rear of the hatch up to remove the hatch from the fuselage.
3. Install the fully charged battery in the middle of the battery compartment, as shown. Secure using the two included hook and loop straps.
4. Connect the battery to the ESC (the ESC is now armed).
5. Keep the aircraft immobile and away from wind or the system will not initialize.
   - The ESC will sound a series of tones.
   - An LED will light on the receiver.
   - If the ESC sounds a continuous double beep after the flight battery is connected, recharge or replace the battery.
6. Reinstall the canopy hatch.

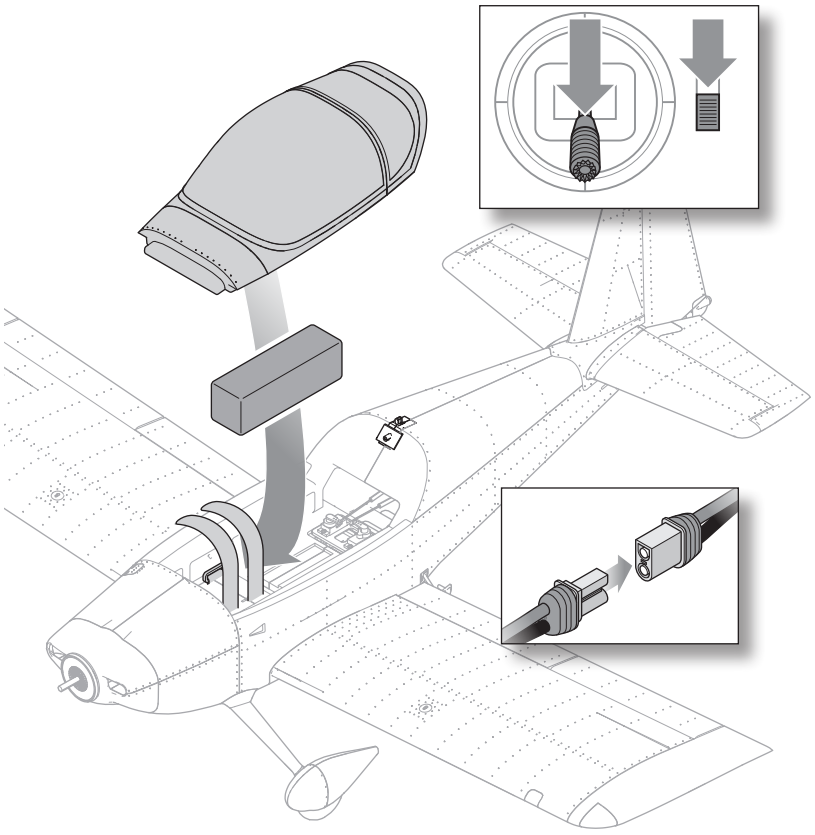

Integrated ESC Telemetry

BNF: This aircraft includes telemetry between the ESC and receiver, which can provide information including RPM, voltage, motor current, throttle setting (%), and FET (speed controller) temperature.

PNP: The ESC in this aircraft is capable of delivering telemetry information over the throttle connection when paired with a Smart compatible Spektrum telemetry receiver. It will function with a normal PWM servo siganl for common radio control systems.

For more information about compatible transmitters, firmware updates, and how to use the telemetry technology on your transmitter, visit www.SpektrumRC.com.

Telemetry Setup	
DX series, NX series, iX series	1. Begin with the transmitter bound to the receiver.
	2. Power ON the transmitter.
	3. Set switch H (throttle cut) to prevent accidental motor operation.
	4. Power ON the aircraft. A signal bar appears on your transmitter's main screen when the telemetry information is being received.
	5. Go to the FUNCTION LIST (Model Setup)
	6. Select TELEMETRY; Smart ESC
	7. Set Total Cells: 4
	8. Set LVC Alarm: 3.4V Set Alarm; Voice/Vibe
	9. Set pole count; 14 pole

SAFE® Select Switch Designation *BNF*

Once SAFE Select is enabled, you can choose to fly in SAFE mode full-time, or assign a switch. Any switch on any channel between 5 and 9 can be used on your transmitter.
If the aircraft is bound with SAFE Select disabled, the aircraft will be in AS3X mode exclusively.

⚠ **CAUTION:** Keep all body parts well clear of the propeller and keep the aircraft securely restrained in case of accidental throttle activation.

IMPORTANT: To be able to assign a switch, first verify:

- The aircraft was bound with SAFE Select enabled.
- Your choice for the SAFE Select switch is assigned to a channel between 5 and 9 (Gear, Aux1-4), and travel is set at 100% in each direction.
- The aileron, elevator, rudder and throttle direction are set to normal, not reverse.
- The aileron, elevator, rudder and throttle are set to 100% travel. If dual rates are in use, the switches need to be in the 100% position.

See your transmitter manual for more information about assigning a switch to a channel.

Assigning a Switch

1. Power on the transmitter.
2. Power on the aircraft.
3. Hold both transmitter sticks to the inside bottom corners, and toggle the desired switch 5 times quickly (1 toggle = full up and down).
4. The control surfaces of the aircraft will move, indicating the switch has been selected.

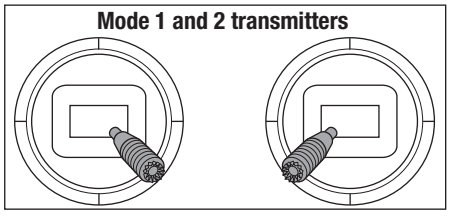

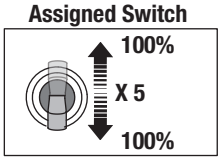

TIP: Use the channel monitor to verify channel movement.*

* This example of the channel monitor shows the stick positions for assigning a switch, the switch selection on Aux2, and +/- 100% travel on the switch.

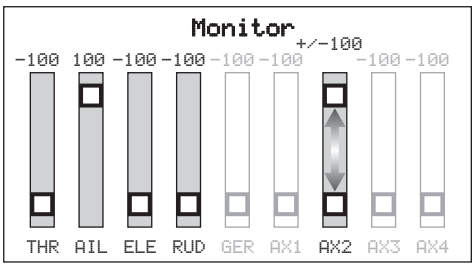

Repeat the process to assign a different switch or to deactivate the current switch.

Forward Programming

Assign the SAFE Select channel through forward programming on your compatible Spektrum transmitter.

Forward Programming SAFE Select Setup	
DX series, NX series, iX series	1. Begin with the transmitter bound to the receiver.
	2. Power ON the transmitter.
	3. Assign a switch for SAFE Select that is not already in use for another function. Use any open channel between 5 and 9 (Gear, Aux1-4).
	4. Set switch H (throttle cut) to prevent accidental motor operation.
	5. Power ON the aircraft. A signal bar appears on your transmitter's main screen when the telemetry information is being received.
	6. Go to the FUNCTION LIST (Model Setup)
	7. Select Forward Programming; Select Gyro Settings; Choose SAFE Select to enter the menu.
	8. Set SAFE Select Ch: To the channel you have chosen for SAFE Select.
	9. Set AS3X and SAFE On or Off as desired for each switch position.

For more information about setting SAFE Select and using Forward Programming, please refer to the following link for a detailed video:
https://www.youtube.com/watch?v=o-46P066cik

Center of Gravity (CG)

The CG location is measured from the leading edge of the wing at the root. 56mm back from the leading edge. Check the CG with the aircraft inverted.

NOTICE: Install the battery and hatch but do not arm the ESC while checking the CG. Personal injury may result.

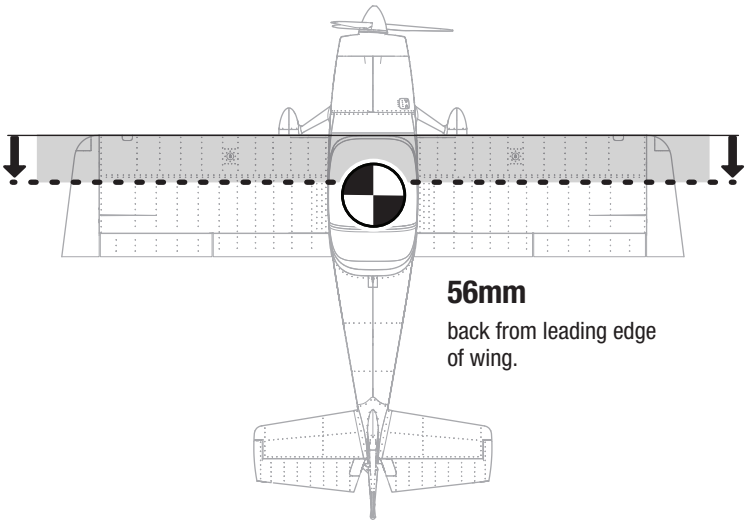

Control Surface Direction

Switch on the transmitter and connect the battery. Use the transmitter to operate the aileron, elevator, and rudder controls. View the aircraft from the rear when checking the control directions.

Ailerons

1. Move the aileron stick to the left. The right aileron should move down and the left aileron up, which will cause the aircraft to bank left.
2. Move the aileron stick to the right. The right aileron should move up and the left aileron down, which will cause the aircraft to bank right.

Elevators

3. Pull the elevator stick back. The elevator should move up, which will cause the aircraft to pitch up.
4. Push the elevator stick forward. The elevator should move down, which will cause the aircraft to pitch down.

Rudder

5. Move the rudder stick to the left. The rudder should move to the left, which will cause the aircraft to yaw left.
6. Move the rudder stick to the right. The rudder should move to the right, which will cause the aircraft to yaw right.

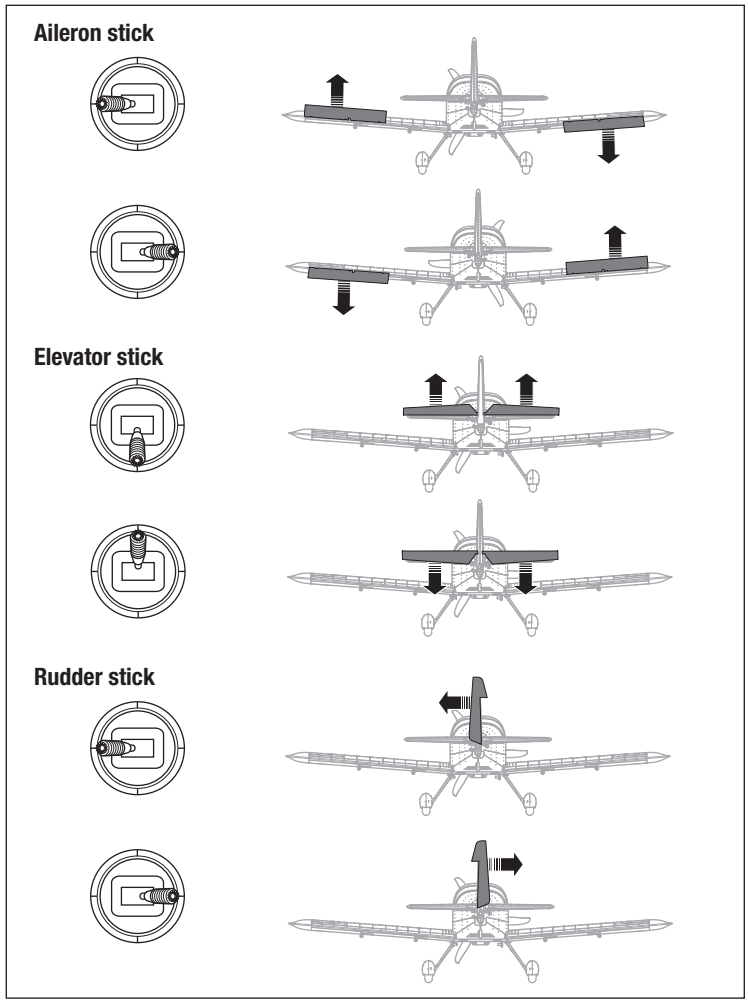

AS3X® Control Response Test *BNF*

WARNING: Do not perform any testing or maintenance with the propeller installed on the aircraft. Serious injury or property damage could result from the motor starting inadvertently.

This test ensures that the AS3X control system is functioning properly. Assemble the aircraft and bind your transmitter to the receiver before performing this test.

1. Raise the throttle just above 25%, then lower the throttle to activate AS3X technology.

WARNING: Keep all body parts, hair and loose clothing away from spinning motor, as these items could become entangled.

2. Move the entire aircraft as shown and ensure the control surfaces move in the direction indicated in the graphic. If the control surfaces do not respond as shown, do not fly the aircraft. Refer to the receiver manual for more information.

Once the AS3X system is active, control surfaces may move rapidly. This is normal. AS3X remains active until the battery is disconnected.

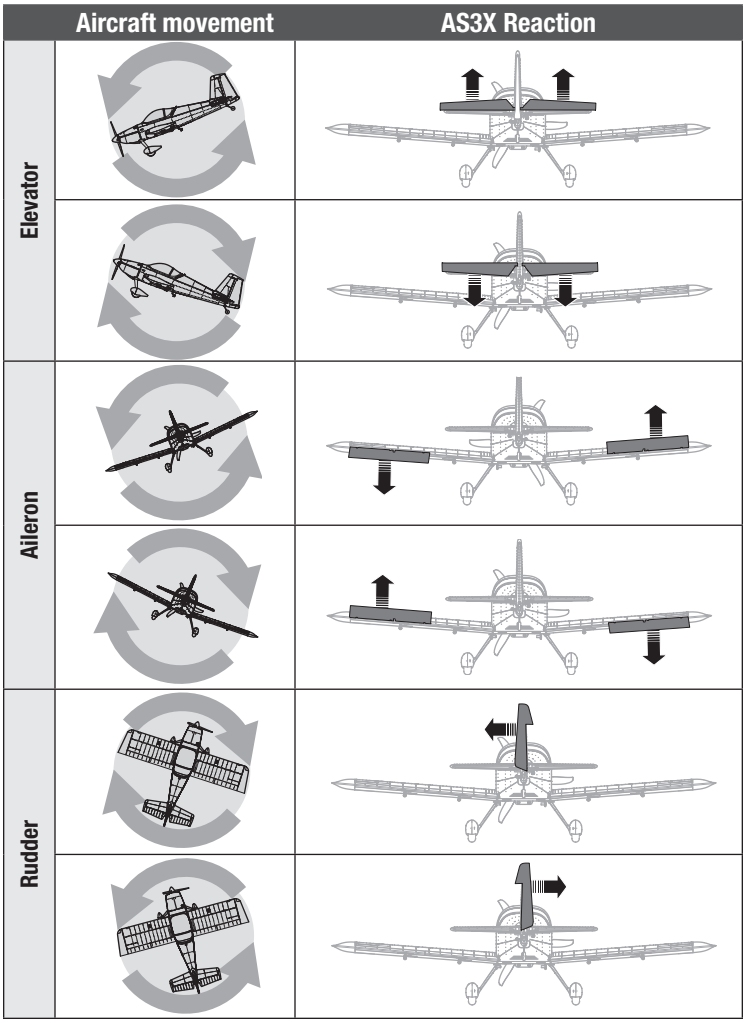

Dual Rates and Control Throws

Program your transmitter to set the rates and control throws to the values given. These values have been tested and are a good starting point to achieve successful flight.
After flying, you may choose to adjust the values for the desired control response.

	High Rate	Low Rate
Aileron	▲ = 16mm ▼ = 16mm	▲ = 12mm ▼ = 12mm
Elevator	▲ = 14mm ▼ = 14mm	▲ = 10mm ▼ = 10mm
Rudder	▶ = 32mm ◀ = 32mm	▶ = 22mm ◀ = 22mm

Propeller Installation

WARNING: Do not install the propeller until the aircraft has been completely assembled, all the systems have been checked thoroughly and you are located at a suitable flying site.

WARNING: Never install a cracked, nicked or otherwise damaged propeller or spinner.

NOTICE: If the propeller is not balanced, the aircraft may vibrate, causing the stabilization system to not operate correctly and/or decrease the life of the servos.

1. Install the spinner backplate onto the prop adapter.
2. Install the propeller, ensuring the embossed size numbers are facing forward.
3. Install the propeller nut and tighten it using a small screw driver or hex wrench inserted through the hole in the prop nut. Do not overtighten the prop nut as damage to the propeller or threads may result.
4. Install the spinner. Ensure the propeller blades are centered in the spinner cutouts. Allowing the spinner to contact the propeller may cause damage to the propeller and may lead to failure of the propeller.
5. Install the M3 x 10mm screw and tighten.

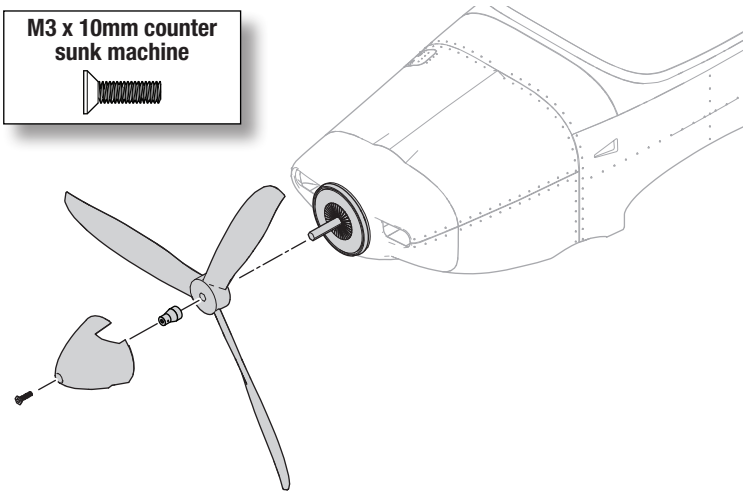

Flying Tips and Repairs

Consult local laws and ordinances before choosing a flying location.

Flying Field

Always choose a wide-open space for flying your aircraft. It is recommended you fly at a designated RC flying field. Always avoid flying near houses, trees, wires and buildings. Avoid flying in areas where there are many people, such as parks, schoolyards, or soccer fields.

Range Check your Radio System

Before you fly, range check the radio system. Refer to your specific transmitter instruction manual for range test information.

Takeoff

For your first flights, set your transmitter timer or a stopwatch to 5 minutes. Adjust your timer for longer or shorter flights once you have flown the model.

Place the aircraft in position for takeoff (facing into the wind). Set the flaps to the takeoff position and select low rates for first takeoff and gradually increase the throttle to 3/4 to full and steer with the rudder. Pull back gently on the elevator and climb to a comfortable altitude.

Flying

Fly the airplane and trim it for level flight at 3/4 throttle. After landing, adjust the linkages mechanically to account for trim changes and then reset the trims to neutral. Ensure the aircraft will fly straight and level with no trim or sub-trim.

Landing

To land the aircraft, reduce the throttle to 1/4 and lower the flaps to the landing position, fly the airplane down to about a foot above the ground. Reduce power and add back pressure on the elevator to flare the airplane. Avoid holding too much elevator after touchdown to prevent the plane from becoming airborne again. Gently steer with the rudder until the plane has slowed. Avoid sharp turns on the ground until the plane has slowed enough to prevent scraping the wing tips.

NOTICE: If a crash is imminent, reduce the throttle and trim fully. Failure to do so could result in extra damage to the airframe, as well as damage to the ESC and motor.

NOTICE: After any impact, always ensure the receiver is secure in the fuselage. If you replace the receiver, install the new receiver in the same orientation as the original receiver or damage may result.

NOTICE: Crash damage is not covered under warranty.

NOTICE: When you are finished flying, never leave the aircraft in direct sunlight or in a hot, enclosed area such as a car. Doing so can damage the aircraft.

Low Voltage Cutoff (LVC)

When a Li-Po battery is discharged below 3V per cell, it will not hold a charge. The ESC protects the flight battery from over-discharge using Low Voltage Cutoff (LVC). Before the battery charge decreases too much, LVC removes power supplied to the motor. Power to the motor pulses, showing that some battery power is reserved for flight control and safe landing. Disconnect and remove the Li-Po battery from the aircraft after use to prevent trickle discharge. Charge your Li-Po battery to about half capacity before storage. During storage, make sure the battery charge does not fall below 3V per cell. LVC does not prevent the battery from over-discharge during storage.

NOTICE: Repeated flying to LVC will damage the battery.

Tip: Monitor your aircraft battery's voltage before and after flying by using a Li-Po Cell Voltage Checker (SPMXBC100, sold separately).

Repairs

Thanks to the foam material this aircraft is constructed of, repairs to the foam can be made using virtually any adhesive (hot glue, regular CA, epoxy, etc).

When parts are not repairable, see the Replacement Parts List for ordering by item number. For a listing of all replacement and optional parts, refer to the list at the end of this manual.

NOTICE: Use of CA accelerant on your aircraft can damage paint. DO NOT handle the aircraft until accelerant fully dries.

SAFE Select Flying Tips *BNF*

When flying in SAFE Select mode the aircraft will return to level flight any time the aileron and elevator controls are at neutral. Applying aileron or elevator control will cause the airplane to bank, climb or dive. The amount the stick is moved will determine the attitude the airplane flies. Holding full control will push the aircraft to the pre-determined bank and roll limits, but it will not go past those angles.

When flying with SAFE Select, it is normal to hold the control stick deflected with moderate aileron input when flying through a turn. To fly smoothly with SAFE Select, avoid making frequent control changes and don't attempt to correct for minor deviations. Holding deliberate control inputs will command the aircraft to fly at a specific angle, and the model will make all corrections to maintain that flight attitude.

When flying with SAFE Select, throttle will make the aircraft climb or descend. Full throttle will cause the aircraft to pitch up and climb slightly. Mid throttle will keep the airplane flying level. Low throttle will cause the airplane to descend slightly nose-down.

Return the elevator and aileron controls to neutral before switching from SAFE Select mode to AS3X mode. If you do not neutralize controls when switching into AS3X mode, the control inputs used for SAFE Select mode will be excessive for AS3X mode and the aircraft will react immediately.

Differences between SAFE Select and AS3X modes

This section is generally accurate but does not take into account flight speed, battery charge status, and other limiting factors.

		SAFE Select	AS3X
Control Input	Control stick is neutralized	Aircraft will self level	Aircraft will continue to fly at its present attitude
	Holding a small amount of control	Aircraft will bank or pitch to a moderate angle and maintain the attitude	Aircraft will continue to pitch or roll slowly
	Holding full control	Aircraft will bank or pitch to the predetermined limits and maintain the attitude	Aircraft will continue to roll or pitch rapidly
	Throttle	Full throttle: Climb Neutral: Level flight Low throttle: Descend	Throttle will not affect flight response.

In Flight Trimming *BNF*

During your first flight, trim the aircraft for level flight at 3/4 throttle with flaps up. Make small trim adjustments with your transmitter's trim switches to straighten the aircraft's flight path.

After adjusting the trim, do not touch the control sticks for 3 seconds. This allows the receiver to learn the correct settings to optimize AS3X performance.

Failure to do so could affect flight performance.

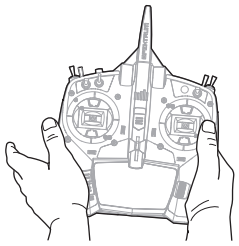

3 Seconds

Post Flight

1. Disconnect the flight battery from the ESC (Required for safety and battery life).
2. Power OFF the transmitter.
3. Remove the flight battery from the aircraft.
4. Recharge the flight battery.

5. Repair or replace all damaged parts.
6. Store the flight battery apart from the aircraft and monitor the battery charge.
7. Make note of the flight conditions and flight plan results, planning for future flights.

Motor Service

⚠ **CAUTION:** Always disconnect the flight battery before performing motor service.

Disassembly

1. Remove the spinner M3x10mm screw and spinner cone from the propeller shaft.
2. Remove the spinner nut by using a small screwdriver or hex wrench.
3. Remove the propeller, and spinner backplate from the motor.
4. Remove the two 2 x 8mm screws from the front of the cowling and remove the cowling from the fuselage.
5. Remove the four 2.5 x 15mm screws and the motor with X-mount from the fuselage.
6. Disconnect the motor wires from the ESC wires.
7. Remove the four M3 x 6mm Phillips head machine screws and motor from the X-mount.

Assembly

- Assemble in reverse order.
- Correctly align and connect the motor wire colors with the ESC wires.
- Install the propeller with the lettering facing out from the motor.
- Tighten the spinner nut to secure the propeller into place.

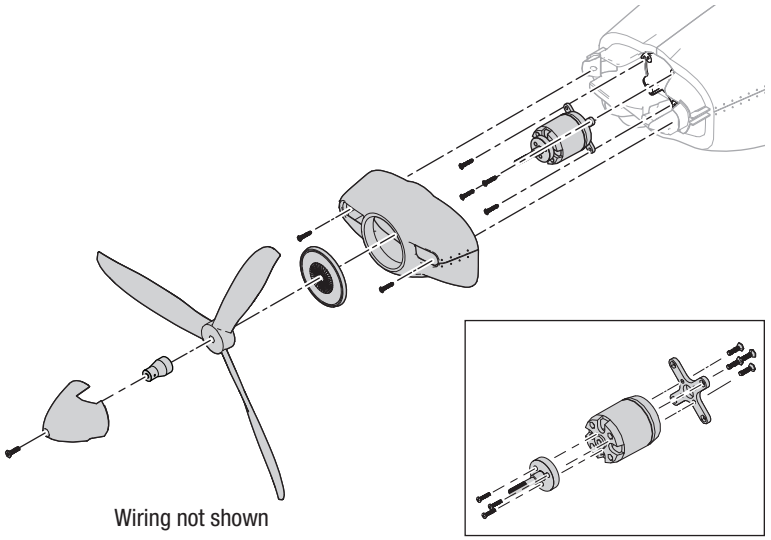

Wiring not shown

Troubleshooting Guide AS3X *BNF*

Problem	Possible Cause	Solution
Oscillation	Damaged propeller or spinner	Replace propeller or spinner
	Imbalanced propeller	Balance the propeller
	Motor vibration	Replace parts or correctly align all parts and tighten fasteners as needed
	Loose receiver	Align and secure receiver in fuselage
	Loose aircraft controls	Tighten or otherwise secure parts (servo, arm, linkage, horn and control surface)
	Worn parts	Replace worn parts (especially propeller, spinner or servo)
	Irregular servo movement	Replace servo
Inconsistent flight performance	Trim is not at neutral	If you adjust trim more than 8 clicks, adjust the clevis to remove trim
	Sub-Trim is not at neutral	No Sub-Trim is allowed. Adjust the servo linkage
	Aircraft was not kept immobile for 5 seconds after battery connection	With the throttle stick in lowest position. Disconnect battery, then reconnect battery and keep the aircraft still for 5 seconds
Incorrect response to the AS3X Control Response Test	Incorrect direction settings in the receiver, which can cause a crash	DO NOT fly. Correct the direction settings (refer to the receiver manual), then fly

Troubleshooting Guide

Problem	Possible Cause	Solution
Aircraft will not respond to throttle but responds to other controls	Throttle not at idle and/or throttle trim too high	Reset controls with throttle stick and throttle trim at lowest setting
	Throttle servo travel is lower than 100%	Make sure throttle servo travel is 100% or greater
	Throttle channel is reversed	Reverse throttle channel on transmitter
	Motor disconnected from ESC	Make sure motor is connected to the ESC
Extra propeller noise or extra vibration	Damaged propeller and spinner, collet or motor	Replace damaged parts
	Propeller is out of balance	Balance or replace propeller
	Prop nut is too loose	Tighten the prop nut
Reduced flight time or aircraft underpowered	Flight battery charge is low	Completely recharge flight battery
	Propeller installed backwards	Install propeller with numbers facing forward
	Flight battery damaged	Replace flight battery and follow flight battery instructions
	Flight conditions may be too cold	Make sure battery is warm before use
	Battery capacity too low for flight conditions	Replace battery or use a larger capacity battery
Aircraft will not Bind (during binding) to transmitter	Transmitter too near aircraft during binding process	Move powered transmitter a few feet from aircraft, disconnect and reconnect flight battery to aircraft
	Aircraft or transmitter is too close to large metal object, wireless source or another transmitter	Move aircraft and transmitter to another location and attempt binding again
	The bind plug is not installed correctly in the bind port	Install bind plug in bind port and bind the aircraft to the transmitter
	Flight battery/transmitter battery charge is too low	Replace/recharge batteries
	Bind switch or button not held long enough during the bind process	Power off transmitter and repeat bind process. Hold transmitter bind button or switch until receiver is bound
Aircraft will not connect (after binding) to transmitter	Transmitter too near aircraft during connecting process	Move powered transmitter a few feet from aircraft, disconnect and reconnect flight battery to aircraft
	Aircraft or transmitter is too close to large metal object, wireless source or another transmitter	Move aircraft and transmitter to another location and attempt connecting again
	Bind plug left installed in bind port	Rebind transmitter to the aircraft and remove the bind plug before cycling power
	Aircraft bound to different model memory (ModelMatch™ radios only)	Select correct model memory on transmitter
	Flight battery/Transmitter battery charge is too low	Replace/recharge batteries
	Transmitter may have been bound to a different aircraft using different DSM protocol	Bind aircraft to transmitter
Control surface does not move	Control surface, control horn, linkage or servo damage	Replace or repair damaged parts and adjust controls
	Wire damaged or connections loose	Do a check of wires and connections, connect or replace as needed
	Transmitter is not bound correctly or the incorrect airplanes was selected	Re-bind or select correct airplanes in transmitter
	Flight battery charge is low	Fully recharge flight battery
	BEC (Battery Elimination Circuit) of the ESC is damaged	Replace ESC
Controls reversed	Transmitter settings are reversed	Perform the Control Direction Test and adjust the controls on transmitter appropriately
Motor power pulses then motor loses power	ESC uses default soft Low Voltage Cutoff (LVC)	Recharge flight battery or replace battery that is no longer performing
	Weather conditions might be too cold	Postpone flight until weather is warmer
	Battery is old, worn out, or damaged	Replace battery
	Battery C rating might be too small	Use recommended battery

Replacement Parts

Part #	Description
EFL01876	Fuselage: RV-7 1.1m
EFL01877	Wing: RV-7 1.1m
EFL01878	Horizontal Stab: RV-7 1.1m
EFL01879	Rudder: RV-7 1.1m
EFL01880	Hatch/Canopy: RV-7 1.1m
EFL01881	Cowl: RV-7 1.1m
EFL01882	Landing Gear: RV-7 1.1m
EFL01883	Wheel Pants: RV-7 1.1m
EFL01884	Tailwheel: RV-7 1.1m
EFL01885	Wheels: RV-7 1.1m
EFL01886	Spinner: RV-7 1.1m
EFL01887	Screw Set: RV-7 1.1m
EFL01888	Linkage Set: RV-7 1.1m
EFL01889	Stab Tube: RV-7 1.1m
EFL01890	Foot Steps and Plates
EFL01891	LED Light Set: RV-7 1.1m
EFL01892	Decal Set: RV-7 1.1m
EFL01893	Propeller, 11x6 3-Blade: RV-7 1.1m
SPMAR631	AR631 6-Channel Receiver
SPMSA334	9g Sub-Micro Digital Servo
SPMXAE45A	ESC: Avian 45A Smart-Lite ESC
SPMXAM1800	Motor 35-36-850KV

Recommended Items

Part #	Description
SPMR6775	NX6 Transmitter Only
SPMX224S50	14.8V 2200mAh 4S 50C Smart LiPo G2: IC3
SPMXCA300	LiPo Charge Protection Bag, Large
SPMXC1000	Spektrum Smart S1200 DC Charger, 1x200W

Optional Items

Part #	Description
ONXT1000	Ultimate Air/Surface Startup Tool Set
SPM6708	Spektrum Single Stand Up Tx Case
SPMR8200	NX8 8 Ch DSMX Transmitter Only
SPMX223S50	2200mAh 3S 11.1V Smart G2 50C;
SPMX323S30	3200mAh 3S 11.1V Smart G2 30C;
SPMX22004S50	14.8V 2200mAh 4S 50C Smart LiPo, IC3
SPMX324S50	14.8V 3200mAh 4S 50C Smart LiPo G2: IC3
SPMX32004S50	14.8V 3200mAh 4S 50C Smart LiPo, IC3
SPMXBC100	XBC100 Smart Battery Checker & Servo Driver
SPMXC1010	Smart S2100 AC Charger, 2X100W
SPMXC2010	Smart S2200 G2 AC Charger,2x200
SPMXCA200	Avian Firma Smart ESC Programmer

AMA National Model Aircraft Safety Code

Effective January 1, 2018

A model aircraft is a non-human-carrying device capable of sustained flight within visual line of sight of the pilot or spotter(s). It may not exceed limitations of this code and is intended exclusively for sport, recreation, education and/or competition. All model flights must be conducted in accordance with this safety code and related AMA guidelines, any additional rules specific to the flying site, as well as all applicable laws and regulations.

As an AMA member I agree:

- I will not fly a model aircraft in a careless or reckless manner.
- I will not interfere with and will yield the right of way to all human-carrying aircraftusing AMA's See and Avoid Guidance and a spotter when appropriate.
- I will not operate any model aircraft while I am under the influence of alcohol or any drug that could adversely affect my ability to safely control the model.
- I will avoid flying directly over unprotected people, moving vehicles, and occupied structures.
- I will fly Free Flight (FF) and Control Line (CL) models in compliance with AMA's safety programming.
- I will maintain visual contact of an RC model aircraft without enhancement other than corrective lenses prescribed to me. When using an advanced flight system, such as an autopilot, or flying First-Person View (FPV), I will comply with AMA's Advanced Flight System programming.
- I will only fly models weighing more than 55 pounds, including fuel, if certified through AMA's Large Model Airplane Program.
- I will only fly a turbine-powered model aircraft in compliance with AMA's Gas Turbine Program.
- I will not fly a powered model outdoors closer than 25 feet to any individual, except for myself or my helper(s) located at the flightline, unless I am taking off and landing, or as otherwise provided in AMA's Competition Regulation.
- I will use an established safety line to separate all model aircraft operations from spectators and bystanders.

Limited Warranty

What this Warranty Covers

Horizon Hobby, LLC, (Horizon) warrants to the original purchaser that the product purchased (the "Product") will be free from defects in materials and workmanship at the date of purchase.

What is Not Covered

This warranty is not transferable and does not cover (i) cosmetic damage, (ii) damage due to acts of God, accident, misuse, abuse, negligence, commercial use, or due to improper use, installation, operation or maintenance, (iii) modification of or to any part of the Product, (iv) attempted service by anyone other than a Horizon Hobby authorized service center, (v) Product not purchased from an authorized Horizon dealer, or (vi) Product not compliant with applicable technical regulations, or (vii) use that violates any applicable laws, rules, or regulations.

OTHER THAN THE EXPRESS WARRANTY ABOVE, HORIZON MAKES NO OTHER WARRANTY OR REPRESENTATION, AND HEREBY DISCLAIMS ANY AND ALL IMPLIED WARRANTIES, INCLUDING, WITHOUT LIMITATION, THE IMPLIED WARRANTIES OF NON-INFRINGEMENT, MERCHANTABILITY AND FITNESS FOR A PARTICULAR PURPOSE. THE PURCHASER ACKNOWLEDGES THAT THEY ALONE HAVE DETERMINED THAT THE PRODUCT WILL SUITABLY MEET THE REQUIREMENTS OF THE PURCHASER'S INTENDED USE.

Purchaser's Remedy

Horizon's sole obligation and purchaser's sole and exclusive remedy shall be that Horizon will, at its option, either (i) service, or (ii) replace, any Product determined by Horizon to be defective. Horizon reserves the right to inspect any and all Product(s) involved in a warranty claim. Service or replacement decisions are at the sole discretion of Horizon. Proof of purchase is required for all warranty claims. SERVICE OR REPLACEMENT AS PROVIDED UNDER THIS WARRANTY IS THE PURCHASER'S SOLE AND EXCLUSIVE REMEDY.

Limitation of Liability

HORIZON SHALL NOT BE LIABLE FOR SPECIAL, INDIRECT, INCIDENTAL OR CONSEQUENTIAL DAMAGES, LOSS OF PROFITS OR PRODUCTION OR COMMERCIAL LOSS IN ANY WAY, REGARDLESS OF WHETHER SUCH CLAIM IS BASED IN CONTRACT, WARRANTY, TORT, NEGLIGENCE, STRICT LIABILITY OR ANY OTHER THEORY OF LIABILITY, EVEN IF HORIZON HAS BEEN ADVISED OF THE POSSIBILITY OF SUCH DAMAGES. Further, in no event shall the liability of Horizon exceed the individual price of the Product on which liability is asserted. As Horizon has no control over use, setup, final assembly, modification or misuse, no liability shall be assumed nor accepted for any resulting damage or injury. By the act of use, setup or assembly, the user accepts all resulting liability. If you as the purchaser or user are not prepared to accept the liability associated with the use of the Product, purchaser is advised to return the Product immediately in new and unused condition to the place of purchase.

Law

These terms are governed by Illinois law (without regard to conflict of law principals). This warranty gives you specific legal rights, and you may also have other rights which vary from state to state. Horizon reserves the right to change or modify this warranty at any time without notice.

WARRANTY SERVICES

Questions, Assistance, and Services

Your local hobby store and/or place of purchase cannot provide warranty support or service. Once assembly, setup or use of the Product has been started, you must contact your local distributor or Horizon directly. This will enable Horizon to better answer your questions and service you in the event that you may need any assistance. For questions or assistance, please visit our website at www.horizonhobby.com, submit a Product Support Inquiry, or call the toll free telephone number referenced in the Warranty and Service Contact Information section to speak with a Product Support representative.

Inspection or Services

If this Product needs to be inspected or serviced and is compliant in the country you live and use the Product in, please use the Horizon Online Service Request submission process found on our website or call Horizon to obtain a Return Merchandise Authorization (RMA) number. Pack the Product securely using a shipping carton. Please note that original boxes may be included, but are not designed to withstand the rigors of shipping without additional protection. Ship via a carrier that provides tracking and insurance for lost or damaged parcels, as Horizon is not responsible for merchandise until it arrives and is accepted at our facility. An Online Service Request is available at http://www.horizonhobby.com/content/service-center_render-service-center. If you do not have internet access, please contact Horizon Product Support to obtain a RMA number along with instructions for submitting your product for service. When calling Horizon, you will be asked to provide your complete name, street address, email address and phone number where you can be reached during business hours. When sending product into Horizon, please include your RMA number, a list of the included items, and a brief summary of the problem. A copy of your original sales receipt must be included for warranty consideration. Be sure your name, address, and RMA number are clearly written on the outside of the shipping carton.

NOTICE: Do not ship LiPo batteries to Horizon. If you have any issue with a LiPo battery, please contact the appropriate Horizon Product Support office.

Warranty Requirements

For Warranty consideration, you must include your original sales receipt verifying the proof-of-purchase date. Provided warranty conditions have been met, your Product will be serviced or replaced free of charge. Service or replacement decisions are at the sole discretion of Horizon.

Non-Warranty Service

Should your service not be covered by warranty, service will be completed and payment will be required without notification or estimate of the expense unless the expense exceeds 50% of the retail purchase cost. By submitting the item for service you are agreeing to payment of the service without notification. Service estimates are available upon request. You must include this request with your item submitted for service. Non-warranty service estimates will be billed a minimum of ½ hour of labor. In addition you will be billed for return freight. Horizon accepts money orders and cashier's checks, as well as Visa, MasterCard, American Express, and Discover cards. By submitting any item to Horizon for service, you are agreeing to Horizon's Terms and Conditions found on our website http://www.horizonhobby.com/content/service-center_render-service-center.

ATTENTION: Horizon service is limited to Product compliant in the country of use and ownership. If received, a non-compliant Product will not be serviced. Further, the sender will be responsible for arranging return shipment of the un-serviced Product, through a carrier of the sender's choice and at the sender's expense. Horizon will hold non-compliant Product for a period of 60 days from notification, after which it will be discarded.

10/15

Contact Information

Country of Purchase	Horizon Hobby	Contact Information	Address
United States of America	Horizon Service Center (Repairs and Repair Requests)	servicecenter.horizonhobby.com/RequestForm/	2904 Research Rd Champaign, Illinois, 61822 USA
	Horizon Product Support (Product Technical Assistance)	productsupport@horizonhobby.com 877-504-0233	
	Sales	websales@horizonhobby.com 800-338-4639	
European Union	Horizon Technischer Service	service@horizonhobby.de	Hanskampring 9 D 22885 Barsbüttel, Germany
	Sales: Horizon Hobby GmbH	+49 (0) 4121 2655 100	

FCC Information

FCC ID: BRWSPMSR6200A

Supplier's Declaration of Conformity

RV-7 (EFL01850/EFL01875)

This device complies with part 15 of the FCC Rules. Operation is subject to the following two conditions: (1) This device may not cause harmful interference, and (2) this device must accept any interference received, including interference that may cause undesired operation.

CAUTION: Changes or modifications not expressly approved by the party responsible for compliance could void the user's authority to operate the equipment.

NOTE: This equipment has been tested and found to comply with the limits for a Class B digital device, pursuant to part 15 of the FCC Rules. These limits are designed to provide reasonable protection against harmful interference in a residential installation. This equipment generates, uses and can radiate radio frequency energy and, if not installed and used in accordance with the instructions, may cause harmful interference to radio communications. However, there is no guarantee that interference will not occur in a particular installation. If this equipment does cause harmful interference to radio or television reception, which can be determined by turning the equipment off and on, the user is encouraged to try to correct the interference by one or more of the following measures:

- Reorient or relocate the receiving antenna.
- Increase the separation between the equipment and receiver.
- Connect the equipment into an outlet on a circuit different from that to which the receiver is connected.
- Consult the dealer or an experienced radio/TV technician for help.

Horizon Hobby, LLC
2904 Research Rd.,
Champaign, IL 61822
Email: compliance@horizonhobby.com
Web: HorizonHobby.com

IC Information

IC: 6157A-SPMSR6200A
CAN ICES-3 (B)/NMB-3(B)

This device contains license-exempt transmitter(s)/receivers(s) that comply with Innovation, Science, and Economic Development Canada's license-exempt RSS(s). Operation is subject to the following 2 conditions:

1. This device may not cause interference.
2. This device must accept any interference, including interference that may cause undesired operation of the device.

Compliance Information for the European Union

EU Compliance Statement:
RV-7 PNP (EFL01875); Hereby, Horizon Hobby, LLC declares that the device is in compliance with the following: EU EMC Directive 2014/30/EU; RoHS 2 Directive 2011/65/EU; RoHS 3 Directive - Amending 2011/65/EU Annex II 2015/863.

RV-7 BNF Basic (EFL01850); Hereby, Horizon Hobby, LLC declares that the device is in compliance with the following: EU Radio Equipment Directive 2014/53/EU; RoHS 2 Directive 2011/65/EU; RoHS 3 Directive - Amending 2011/65/EU Annex II 2015/863.

The full text of the EU declaration of conformity is available at the following internet address: https://www.horizonhobby.com/content/support-render-compliance.

v**Wireless Frequency Range and Wireless Output Power:**
Receiver:
2404-2476MHz / 5.58dBm

EU Manufacturer of Record:
Horizon Hobby, LLC
2904 Research Road
Champaign, IL 61822 USA

EU Importer of Record:
Horizon Hobby, GmbH
Hanskampring 9
22885 Barsbüttel Germany

WEEE NOTICE:

This appliance is labeled in accordance with European Directive 2012/19/EU concerning waste of electrical and electronic equipment (WEEE). This label indicates that this product should not be disposed of with household waste. It should be deposited at an appropriate facility to enable recovery and recycling.

E328

© 2021 Horizon Hobby, LLC.
E-flite, Avian, DSM, DSM2, DSMX, Bind-N-Fly, BNF, the BNF logo, Plug-N-Play, AS3X, SAFE, the SAFE logo, ModelMatch, IC3, EC3, and the Horizon Hobby logo are trademarks or registered trademarks of Horizon Hobby, LLC.
The Spektrum trademark is used with permission of Bachmann Industries, Inc.
All other trademarks, service marks and logos are property of their respective owners.
US 8,672,726. US 9,056,667. US 9,753,457. US 9,930,567. US 10,078,329. US 10,419,970. US 10,849,013. Other patents pending.
https://www.horizonhobby.com/content/e-flite-rc