Body Assembly

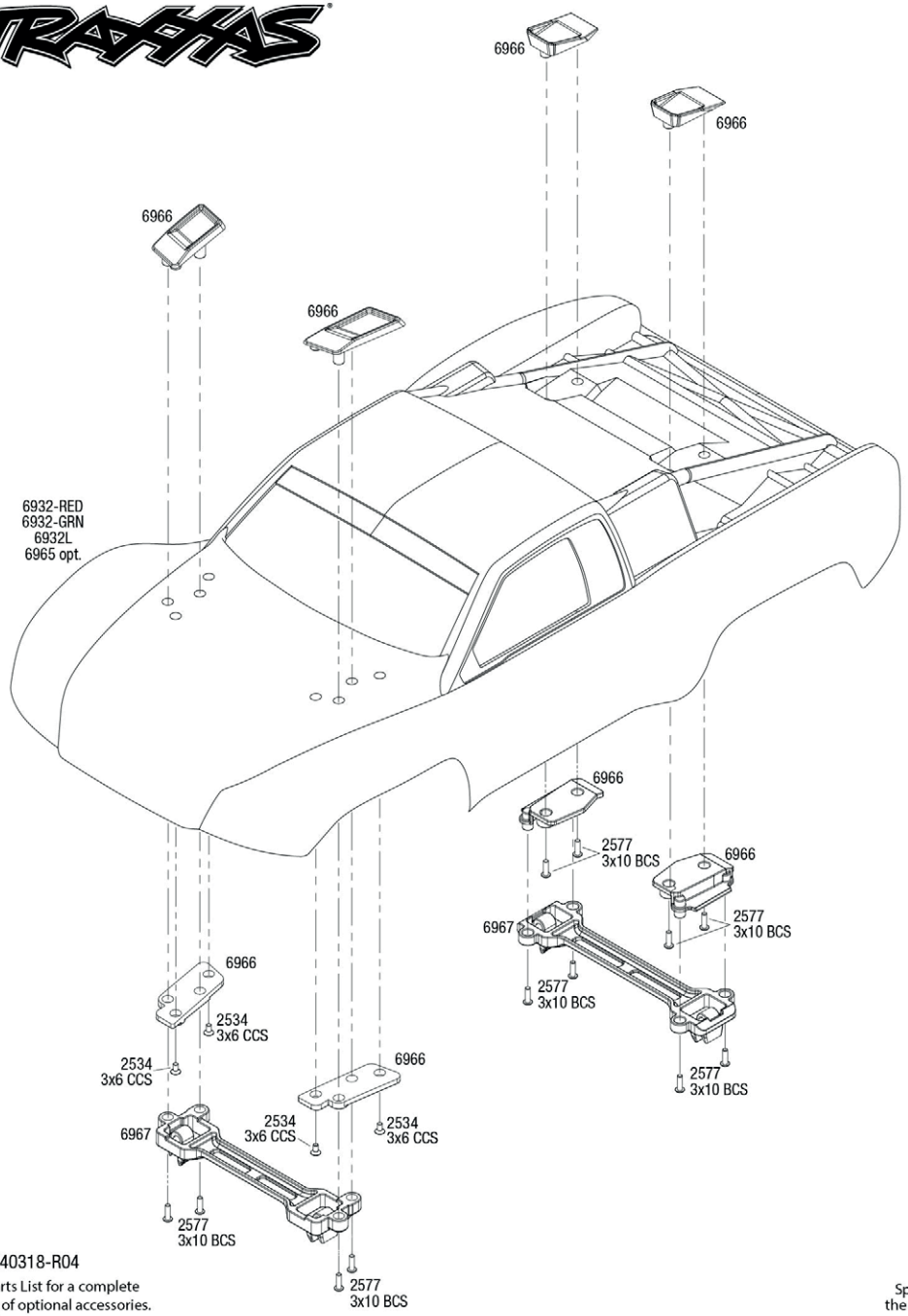

REV 240318-R04

See Parts List for a complete listing of optional accessories.

Completed Assembly (view from top)

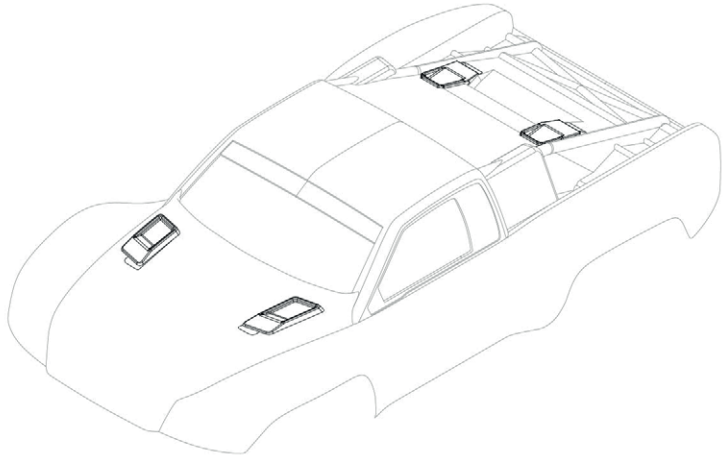

Completed Assembly (view from bottom)

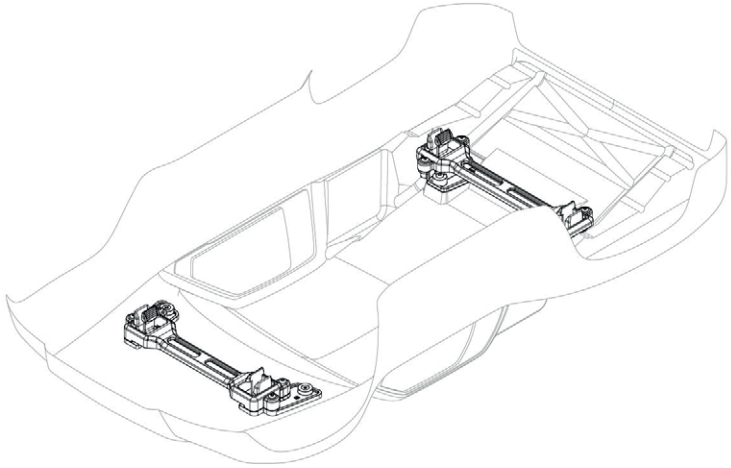

Specifications on this page are subject to change without notice. Every attempt has been made to ensure the accuracy of this drawing; however, Traxxas cannot be held responsible for typographical or other errors.

Chassis Assembly

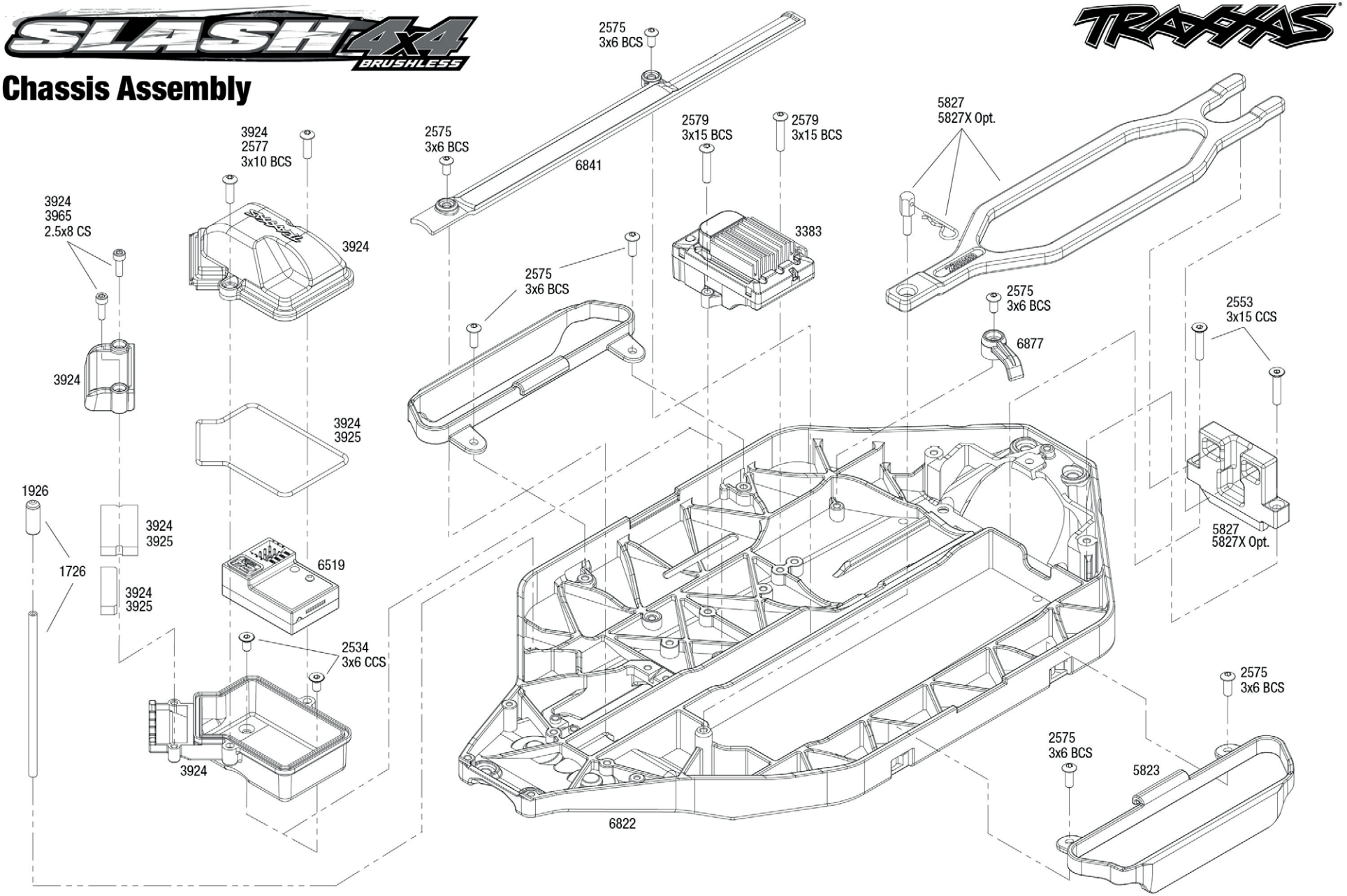

Specifications on this page are subject to change without notice. Every attempt has been made to ensure the accuracy of this drawing; however, Traxxas cannot be held responsible for typographical or other errors.

See Parts List for a complete listing of optional accessories.

REV 240318-R04

Driveshafts

Front Driveshaft Assembly

Available fully assembled as part #9051

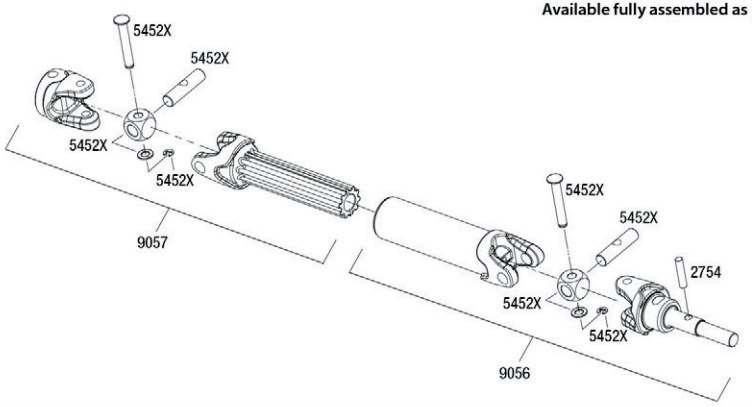

Rear Driveshaft Assembly

Available fully assembled as part #9052

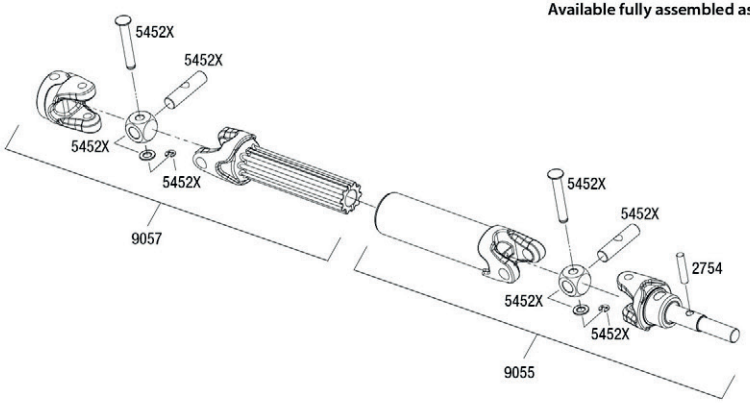

Modular Assembly

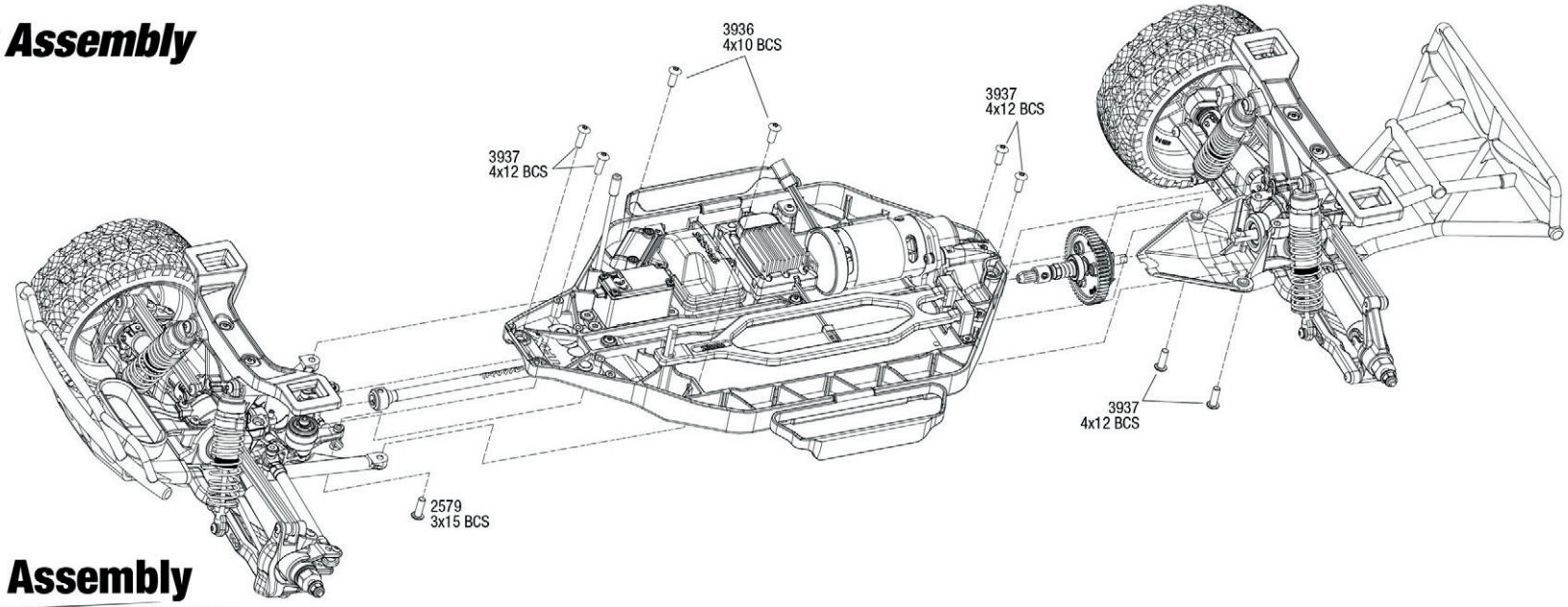

Driveshaft Assembly

REV 240318-R04

Specifications on this page are subject to change without notice.
Every attempt has been made to ensure the accuracy of this drawing; however, Traxxas cannot be held responsible for typographical or other errors. See Parts List for a complete listing of optional accessories.

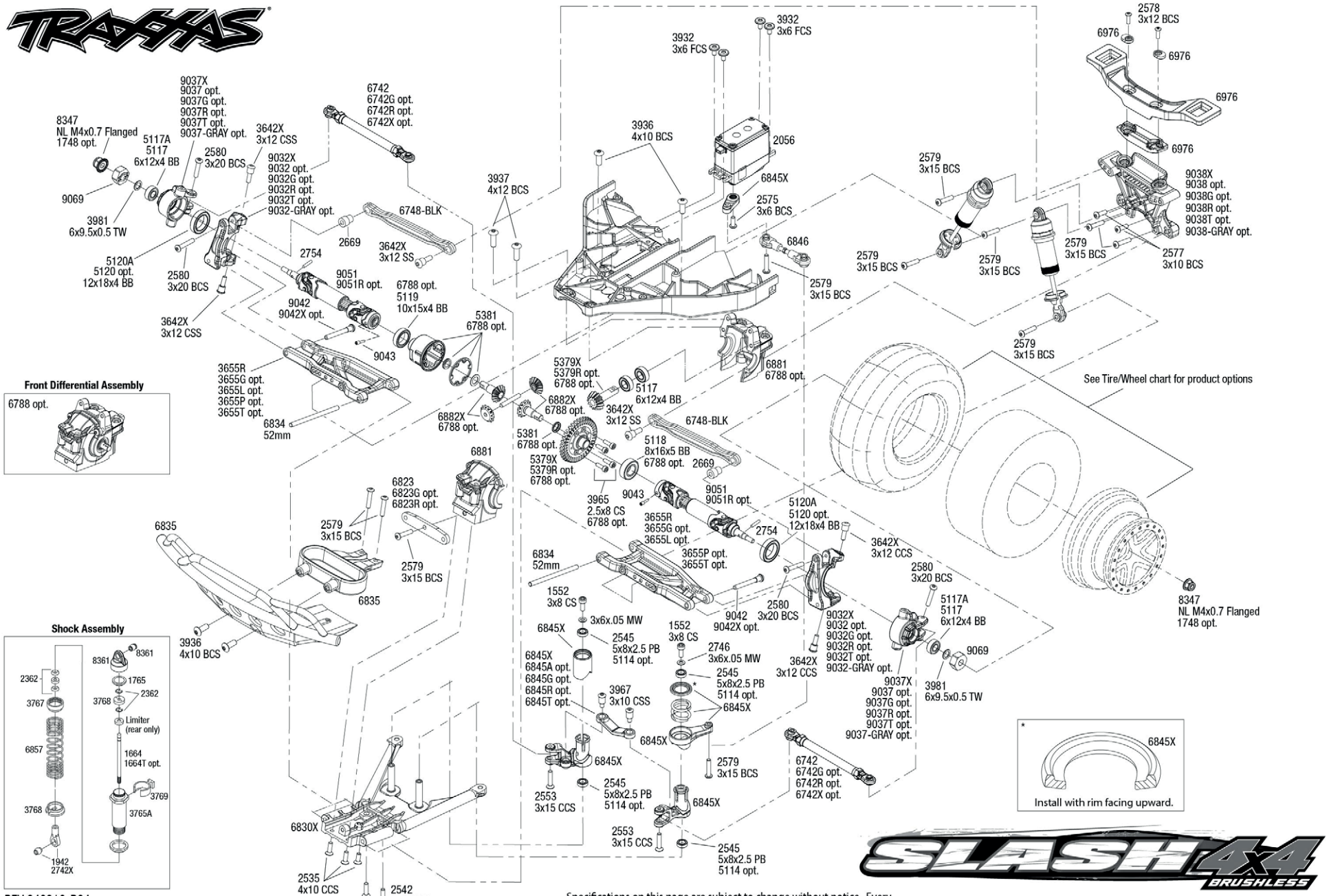

REV 240318-R04

See Parts List for a complete listing of optional accessories.

Specifications on this page are subject to change without notice. Every attempt has been made to ensure the accuracy of this drawing; however, Traxxas cannot be held responsible for typographical or other errors.

Front Assembly

Rear Assembly

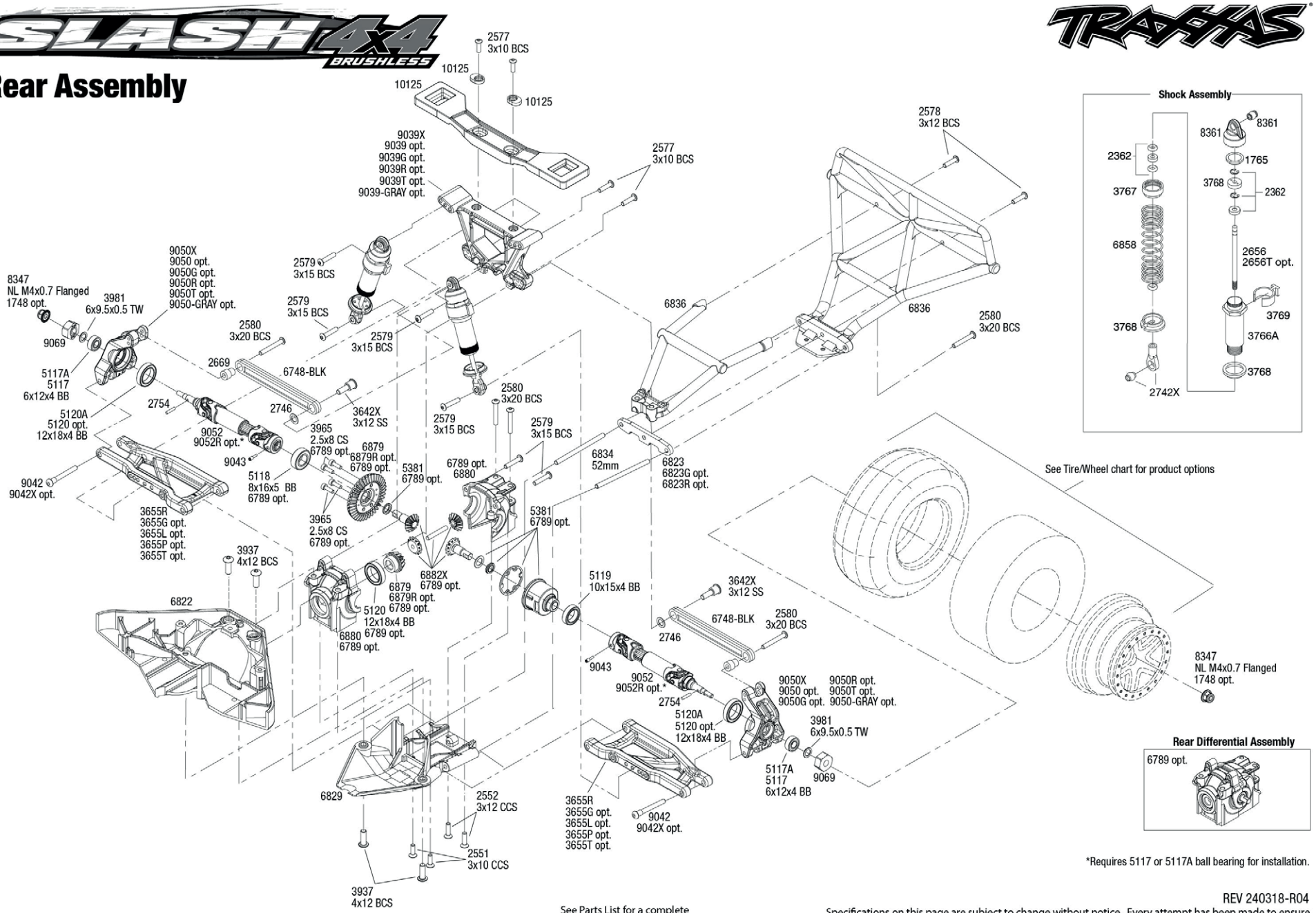

*Requires 5117 or 5117A ball bearing for installation.

See Parts List for a complete listing of optional accessories.

REV 240318-R04

Specifications on this page are subject to change without notice. Every attempt has been made to ensure the accuracy of this drawing; however, Traxxas cannot be held responsible for typographical or other errors.

SLASH 4X4 BRUSHLESS

Wheel and Tire Chart

TRAXXAS®

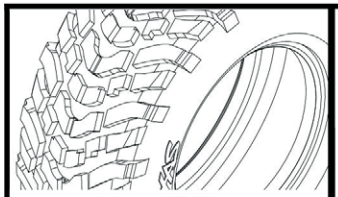

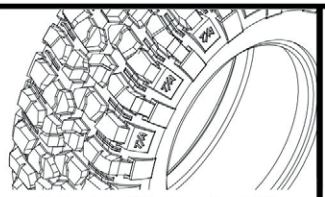

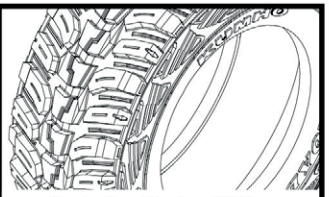

			Traxxas SCT Tires with Foam Inserts		BFGoodrich® Mud Terrain™ T/A® Tires with Foam Inserts		Kumho Road Venture MT tires with Foam Inserts	
			5871	*S1 Ultra-Soft Racing Compound* **5871R**	**6871**	*S1 Ultra-Soft Racing Compound* **6871R**	**6870**	*S1 Ultra-Soft Racing Compound* **6870R**
	Wheels*		**Assembled Wheels and Tires**		**Assembled Wheels and Tires**		**Assembled Wheels and Tires**	
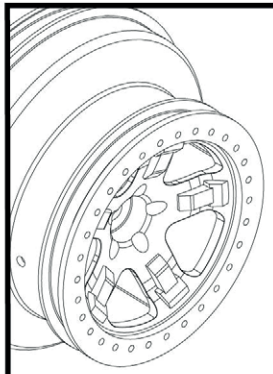 **Traxxas SCT Wheels**	Satin Beadlock/ Satin Wheel - Slash Rear or Slash 4X4 Front/Rear	5872	5873†	-	-	-	5880X	-
	Satin Beadlock/ Satin Wheel - Slash Front	5874	5875	-	-	-	5881X	-
	Red Beadlock/ Satin Wheel - Slash Rear or Slash 4X4 Front/Rear	-	5873A	5873R	-	-	-	-
	Red Beadlock/ Satin Wheel - Slash Front	5874A	-	-	-	-	-	-
	Black Beadlock/ Satin Wheel - Slash Rear or Slash 4X4 Front/Rear	5872X	5873X	-	5878	-	5880	-
	Black Beadlock/ Satin Wheel - Slash Front	5874X	5875X	-	-	-	5881	-
	Red Beadlock/ Chrome Wheel - Slash Rear or Slash 4X4 Front/Rear	5868	5887†	5887R	5867	-	-	-
	Red Beadlock/ Chrome Wheel - Slash Front	-	5888	-	5869	-	-	-
	Blue Beadlock/ Chrome Wheel - Slash Rear or Slash 4X4 Front/Rear	5868A	-	-	5867A	-	-	-
	Blue Beadlock/ Chrome Wheel - Slash Front	5870A	-	-	5869A	-	-	-
	Green Beadlock/ Chrome Wheel - Slash Front	5866	-	-	5865	-	-	-
	Green Beadlock/ Chrome Wheel - Slash Rear or Slash 4X4 Front/Rear	6875	-	-	6876	-	-	-
	Orange Beadlock/ Black Wheel - Slash Front	5870X	5864	-	-	-	-	-
	Orange Beadlock/ Black Wheel -Slash Rear or Slash 4X4 Front/Rear	5868X	5863†	5863R†	-	-	-	-
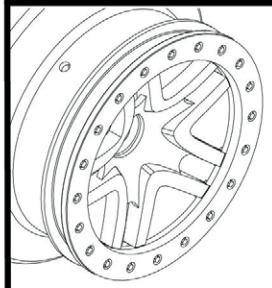 **Split Spoke Wheels**	Black Beadlock/ Satin Wheel - Slash Rear or Slash 4X4 Front/Rear	6872	6892†	6892R	6873†	6873X	6874	6874R
	Black Beadlock/ Satin Wheel - Slash Front	5876	-	-	5877	-	5882	5882R
	Black Chrome Beadlock/ Black Wheel - Slash Rear or Slash 4X4 Front/Rear	-	-	-	-	6873T†	-	-
	Red Beadlock/ Chrome Wheel - Slash Rear or Slash 4X4 Front/Rear	6872A	6891†	6891R†	6873A	6873R	-	-
	Red Beadlock/ Chrome Wheel - Slash Front	-	-	-	5877A	5877R	-	-
	Green Beadlock/ Chrome Wheel - Slash Rear or Slash 4X4 Front/Rear Front	6872X	-	-	-	-	-	-
	Satin Beadlock/ Black Wheel - Slash Front	5886	5890	-	5885	-	-	-
	Satin Beadlock/ Black Wheel - Slash Rear or Slash 4X4 Front/Rear	5884	5889†	5889R	5883	-	-	-
	Blue Beadlock/ Black Wheel - Slash Front	5886A	-	-	5885A	-	-	-
	Blue Beadlock/ Black Wheel - Slash Rear or Slash 4X4 Front/Rear	5884A	-	-	5883A	-	-	-
	Gray Beadlock/ Gray Wheel - Slash Rear or Slash 4X4 Front/Rear	-	6964†	-	-	-	-	-
	Orange Beadlock/ Orange Wheel - Slash Rear or Slash 4X4 Front/Rear	-	5892†	-	-	-	-	-
	Green Beadlock/ Green Wheel - Slash Rear or Slash 4X4 Front/Rear	-	5892G†	-	-	-	-	-

* Wheels and/or tires sold in pairs
†TSM rated

Specifications on this page are subject to change without notice. Every attempt has been made to ensure the accuracy of this drawing; however, Traxxas cannot be held responsible for typographical or other errors. See Parts List for a complete listing of optional accessories.

BFGoodrich and all associated names are trademarks used with permission.
Distributed under license by Traxxas LP. Copyright © 2023 MNA, Inc. All rights reserved.

REV 240318-R04

Transmission Assembly

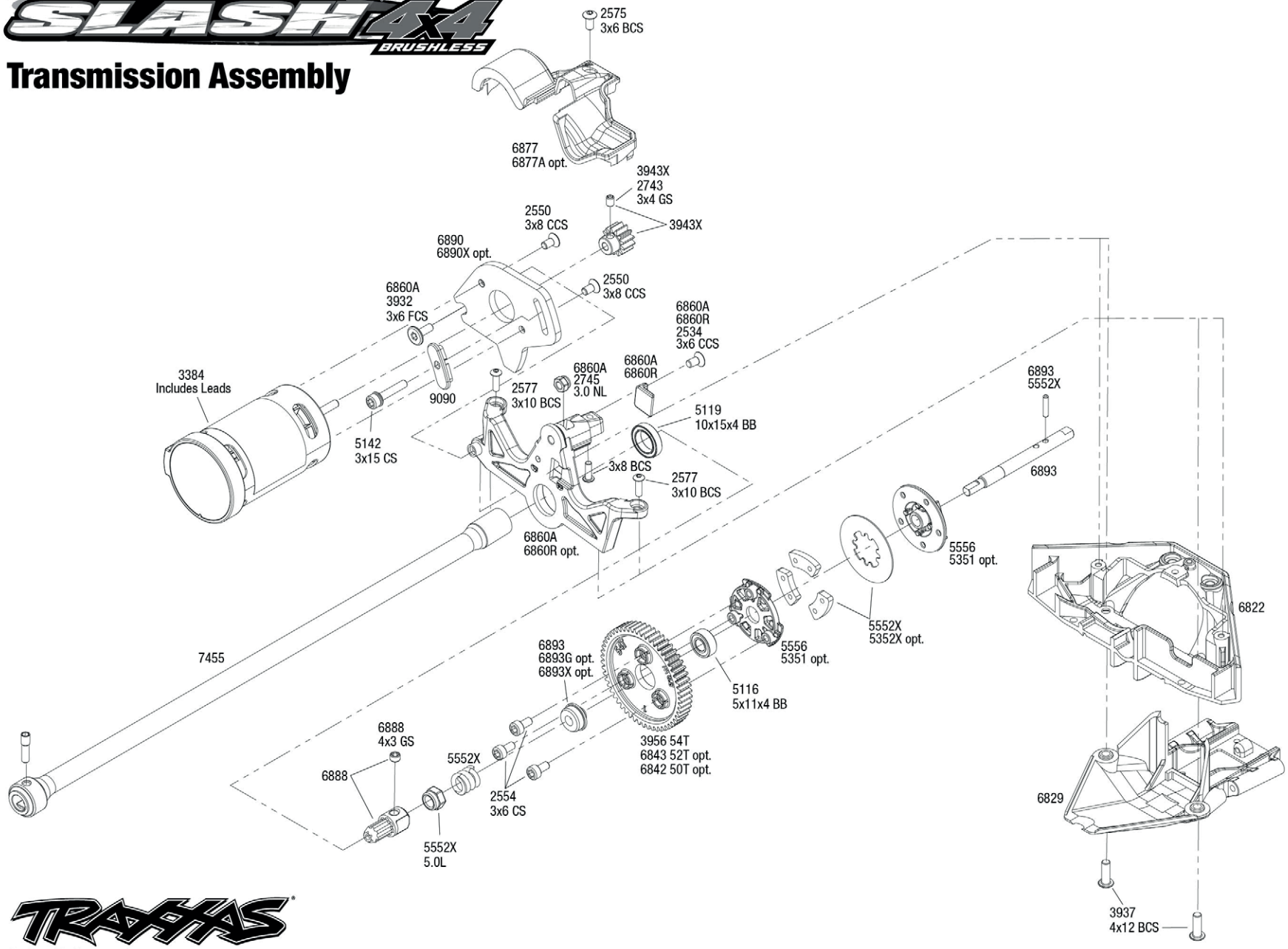

See Parts List for a complete listing of optional accessories.

REV 240318-R04

Specifications on this page are subject to change without notice. Every attempt has been made to ensure the accuracy of this drawing; however, Traxxas cannot be held responsible for typographical or other errors.