DESERT BUGGY XL-E™ 2.0

1/5-SCALE READY-TO-RUN

INSTRUCTION MANUAL
BEDIENUNGSANLEITUNG
MANUEL D'UTILISATION
MANUALE DI ISTRUZIONI

Before operating this vehicle, please read all printed materials thoroughly.
Horizon Hobby is not responsible for inadvertent errors in this manual.

NOTICE

All instructions, warranties and other collateral documents are subject to change at the sole discretion of Horizon Hobby, LLC. For up-to-date product literature, visit www.horizonhobby.com or www.towerhobbies.com and click on the support or resources tab for this product.

MEANING OF SPECIAL LANGUAGE

The following terms are used throughout the product literature to indicate various levels of potential harm when operating this product:

WARNING: Procedures, which if not properly followed, create the probability of property damage, collateral damage, and serious injury OR create a high probability of superficial injury.

CAUTION: Procedures, which if not properly followed, create the probability of physical property damage AND a possibility of serious injury.

NOTICE: Procedures, which if not properly followed, create a possibility of physical property damage AND a little or no possibility of injury.

⚠ **WARNING:** Read the ENTIRE instruction manual to become familiar with the features of the product before operating. Failure to operate the product correctly can result in damage to the product, personal property and cause serious injury.

This is a sophisticated hobby product. It must be operated with caution and common sense and requires some basic mechanical ability. Failure to operate this Product in a safe and responsible manner could result in injury or damage to the product or other property. This product is not intended for use by children without direct adult supervision. Do not use with incompatible components or alter this product in any way outside of the instructions provided by Horizon Hobby, LLC. This manual contains instructions for safety, operation and maintenance. It is essential to read and follow all the instructions and warnings in the manual, prior to assembly, setup or use, in order to operate correctly and avoid damage or serious injury.

⚠ **WARNING AGAINST COUNTERFEIT PRODUCTS** Always purchase from a Horizon Hobby, LLC authorized dealer to ensure authentic high-quality Spektrum product. Horizon Hobby, LLC disclaims all support and warranty with regards, but not limited to, compatibility and performance of counterfeit products or products claiming compatibility with DSM or Spektrum technology.

Age Recommendation: Not for children under 14 years. This is not a toy.

SAFETY PRECAUTIONS AND WARNINGS

As the user of this product, you are solely responsible for operating in a manner that does not endanger yourself and others or result in damage to the product or property of others.

This model is controlled by a radio signal subject to interference from many sources outside your control. This interference can cause momentary loss of control, so it is advisable to always keep a safe distance in all directions around your model as this margin will help avoid collisions or injury.

- Never operate your model with low transmitter batteries.
- Always operate your model in open spaces away from full-size vehicles, traffic and people.
- Never operate the model in the street or in populated areas for any reason.
- Carefully follow the directions and warnings for this and any optional support equipment (chargers, rechargeable battery packs, etc.) you use.
- Keep all chemicals, small parts and anything electrical out of the reach of children.
- Never lick or place any portion of the model in your mouth as it could cause serious injury or even death.
- Exercise caution when using tools and sharp instruments.
- Take care during maintenance as some parts may have sharp edges.
- Immediately after using your model, do NOT touch equipment such as the motor, electronic speed control and battery, because they generate high temperatures. You may burn yourself seriously touching them.
- Do not put fingers or any objects inside rotating and moving parts, as this may cause damage or serious injury.
- Always turn on your transmitter before you turn on the receiver in the car. Always turn off the receiver before turning your transmitter off.
- Keep the wheels of the model off the ground when checking the operation of the radio equipment.

TABLE OF CONTENTS

BOX CONTENTS 3
WATER-RESISTANT VEHICLE WITH WATERPROOF ELECTRONICS 3
QUICK START 4
CHARGING THE BATTERIES 4
INSTALLING THE BATTERIES 4
TRANSMITTER FUNCTIONS 4
SR6100AT AVC TECHNOLOGY TELEMETRY RECEIVER 5
BINDING AND CALIBRATING THE RECEIVER 6
DRIVING PRECAUTIONS 6
BEFORE RUNNING THE VEHICLE 6
POWERING ON THE VEHICLE 6
AVC® SENSITIVITY 7
RUN TIME 7
CHANGING THE TRAVEL ADJUST SETTINGS 7
CONTROL DIRECTION TEST 7
ADJUSTING STEERING AND THROTTLE TRIMS 7
VEHICLE TUNING 7
CAMBER 8
DROOP 8
SHOCK OIL 8
SHOCK SPRINGS 8
SHOCK MOUNTING POSITIONS 9
FRONT TOE 9
SWAY BARS 9
DIFFERENTIALS 9
SPEKTRUM™ FIRMA™ 780KV BRUSHLESS MOTOR 10
SPEKTRUM™ FIRMA™ SMART 160A BRUSHLESS ESC 10
VEHICLE MAINTENANCE 12
TROUBLESHOOTING GUIDE 16
LIMITED WARRANTY 16
WARRANTY AND SERVICE CONTACT INFORMATION 16
FCC AND CANADA COMPLIANCE INFORMATION 17
IC INFORMATION 17
COMPLIANCE INFORMATION FOR THE EUROPEAN UNION 17
REPLACEMENT PARTS 68–69
RECOMMENDED PARTS 69
OPTIONAL PARTS 70
EXPLODED VIEWS 71–74

BOX CONTENTS

COMPONENTS

- Losi® DBXL-E 2.0 RTR, AVC®: 1/5-Scale 4WD Desert Buggy (LOS05020V2)
- Spektrum™ DX3™ 2.4GHz Transmitter (SPMR2340)
- Spektrum SR6100AT 6 Channel AVC Telemetry Surface Receiver (SPMSR6100AT)
- Spektrum S906 1/5 Waterproof Servo (SPMS906)
- Spektrum Firma™ SMART 160A Brushless ESC (SPMXSE1160)
- Spektrum Firma 56113 780Kv Brushless Motor (SPMXSM1100)
- 4 AA batteries (for transmitter)

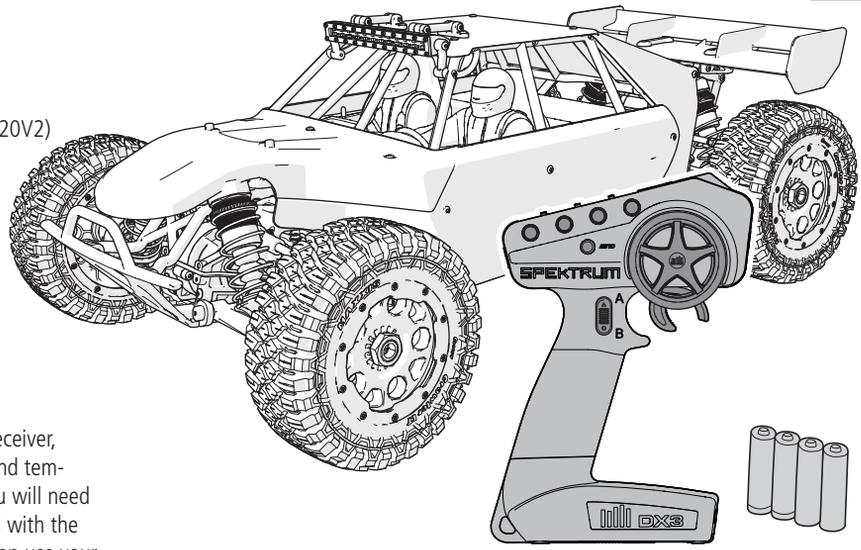

SPEKTRUM SMART TECHNOLOGY

The DBXL-E 2.0 includes Spektrum SMART Technology in the ESC and receiver, which can provide you with telemetry information like battery voltage and temperature from your vehicle. To take advantage of SMART Technology, you will need a compatible transmitter. The included DX3 transmitter can be upgraded with the Spektrum BT2000 DX3 Smart Bluetooth Module (SPMBT2000) so you can use your mobile device as a telemetry screen with the Spektrum Dashboard App. Or, consider upgrading to a SMART Technology compatible Spektrum transmitter like the DX5C (SPMR5100, transmitter only), DX5 Pro (SPMR5010, transmitter only) or DX5 Rugged (SPM5200, includes SR515 receiver). Use Spektrum SMART batteries to power your DBXL-E 2.0 to take full advantage of SMART Technology, which can communicate battery data through the system as well.

Visit www.SpektrumRC.com for more information.

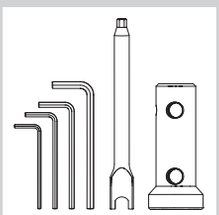

Included Tools:

- Turnbuckle Wrench/5mm Hex Wrench
- 24mm Wheel Wrench
- 2mm L Hex Wrench
- 2.5mm L Hex Wrench
- 3mm L Hex Wrench
- 4mm L Hex Wrench

WATER-RESISTANT VEHICLE WITH WATERPROOF ELECTRONICS

Your new Horizon Hobby vehicle has been designed and built with a combination of waterproof and water-resistant components to allow you to operate the product in many "wet conditions," including puddles, creeks, wet grass, snow and even rain.

While the entire vehicle is highly water-resistant, it is not completely waterproof and your vehicle should NOT be treated like a submarine. The various electronic components used in the vehicle, such as the Electronic Speed Control (ESC), servo(s) and receiver are waterproof, however, most of the mechanical components are water-resistant and should not be submerged.

Metal parts, including the bearings, hinge pins, screws and nuts, as well as the contacts in the electrical cables, will be susceptible to corrosion if additional maintenance is not performed after running in wet conditions. To maximize the long-term performance of your vehicle and to keep the warranty intact, the procedures described in the "Wet Conditions Maintenance" section below must be performed regularly if you choose to run in wet conditions. If you are not willing to perform the additional care and maintenance required, then you should not operate the vehicle in those conditions.

⚠ **CAUTION:** Failure to exercise caution while using this product and complying with the following precautions could result in product malfunction and/or void the warranty.

GENERAL PRECAUTIONS

- Read through the wet conditions maintenance procedures and make sure that you have all the tools you will need to properly maintain your vehicle.
- Not all batteries can be used in wet conditions. Consult the battery manufacturer before use. Caution should be taken when using Li-Po batteries in wet conditions.
- Most transmitters are not water-resistant. Consult your transmitter's manual or the manufacturer before operation.
- Never operate your transmitter or vehicle where lightning may be present.
- Do not operate your vehicle where it could come in contact with salt water (ocean water or water on salt-covered roads), contaminated or polluted water. Salt water is very conductive and highly corrosive, so use caution.
- Even minimal water contact can reduce the life of your motor if it has not been certified as water-resistant or waterproof. If the motor becomes excessively wet, apply very light throttle until the water is mostly removed from the motor. Running a wet motor at high speeds may rapidly damage the motor.
- Driving in wet conditions can reduce the life of the motor. The additional resistance of operating in water causes excess strain. Alter the gear ratio by using a smaller pinion or larger spur gear. This will increase torque (and motor life) when running in mud, deeper puddles, or any wet conditions that will increase the load on the motor for an extended period of time.

WET CONDITIONS MAINTENANCE

- Drain any water that has collected in the tires by spinning them at high speed. With the body removed, place the vehicle upside down and pull full throttle for a few short bursts until the water has been removed.

⚠ **CAUTION:** Always keep hands, fingers, tools and any loose or hanging objects away from rotating parts when performing the above drying technique.

- Remove the battery pack(s) and dry the contacts. If you have an air compressor or a can of compressed air, blow out any water that may be inside the recessed connector housing.
- Remove the tires/wheels from the vehicle and gently rinse the mud and dirt off with a garden hose. Avoid rinsing the bearings and transmission.

NOTICE: Never use a pressure washer to clean your vehicle.

- Use an air compressor or a can of compressed air to dry the vehicle and help remove any water that may have gotten into small crevices or corners.
- Spray the bearings, drive train, fasteners and other metal parts with a water-displacing light oil. Do not spray the motor.
- Let the vehicle air dry before you store it. Water (and oil) may continue to drip for a few hours.
- Increase the frequency of disassembly, inspection and lubrication of the following:
  - Front and rear axle hub assembly bearings.
  - All transmission cases, gears and differentials.
  - Motor—clean with an aerosol motor cleaner and re-oil the bushings with lightweight motor oil.

QUICK START

Please read the entire manual to gain a full understanding of the DBXL-E 2.0 RTR vehicle, fine-tuning the setup and performing maintenance.

1. **Read the safety precautions found in this manual.**
2. **Charge a battery for the vehicle. Refer to the included charging warnings and instructions for battery charging information.**
3. **Install the AA batteries in the transmitter. Only use alkaline or rechargeable batteries.**
4. **Install the fully charged battery in the vehicle.**
5. **Power ON the transmitter and then power ON the vehicle. Wait 5 seconds for the ESC to initialize.**
6. **Check the steering and throttle control directions. Verify that the servos are moving in the correct direction. Always power the transmitter ON before the vehicle and power it OFF after the vehicle has been powered OFF.**
7. **Drive the vehicle.**
8. **Perform any necessary maintenance.**

CHARGING THE BATTERIES

The DBXL-E 2.0 requires two batteries for operation. Choose a matched pair of 3S or 4S batteries to power the DBXL-E 2.0. The included Spektrum™ Firma™ SMART 160A Brushless ESC (SPMXSE1160) has two IC5® battery connectors wired in series, so the vehicle will operate on 6S when powered by two 3S batteries, and 8S when powered by two 4S batteries. We recommend a pair of Spektrum 5000mAh 3S 11.1V 100C SMART LiPo Batteries (SPMX50003S100H5) or a pair of Spektrum 5000mAh 4S 14.8V 100C SMART LiPo Batteries (SPMX50004S100H5).

We recommend using Spektrum SMART Batteries with a Spektrum SMART charger because the charger will automatically configure the charge settings. The Spektrum Smart S2200 G2 AC Charger (SPMXC2010) has dual charge ports, making it ideal for the DBXL-E 2.0 because it can charge both batteries required for operation.

Refer to your battery and charger manuals for usage, safety, and charging information.

INSTALLING THE BATTERIES

1. Remove the 2 body clips from the vehicle as shown.
2. Lift the body to access the chassis.
3. Install (2) fully charged batteries in the vehicle.
4. Secure with the hook and loop straps.
5. Connect the batteries to the ESC.

IMPORTANT: Secure the ESC wires so they do not interfere with the gearing.

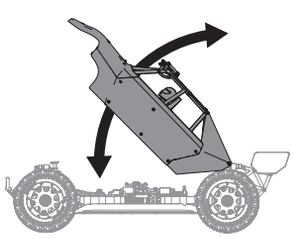

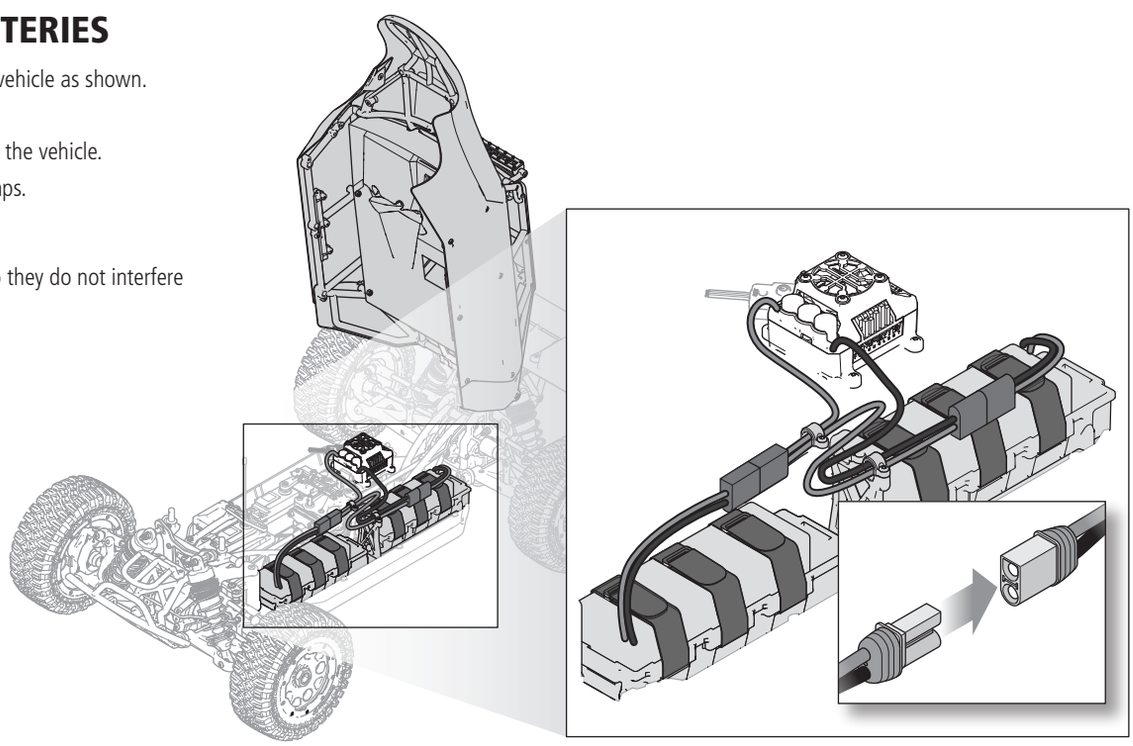

TRANSMITTER FUNCTIONS

A/B. Channel 3 Button

C. Throttle/Brake

D. Steering Wheel

E. Steering Rate
Adjusts the end point of the steering

F. Brake Rate
Adjusts the braking end point.

G. Steering Trim
Adjusts the steering center point. Normally, the steering trim is adjusted until the vehicle tracks straight.

H. Throttle Trim
Adjusts the throttle neutral point

I. SMART Battery Level Indicator

J. Servo Reversing
To reverse the Throttle (TH) or Steering (ST) channel, switch the position of the correlating switch—"N" is for normal, "R" is for reverse.

K. Throttle Limit
Limits throttle output to 50/75/100%
Select 50% or 75% for less experienced drivers or when you are driving the vehicle in a small area.

L. Power LED
- **Solid red lights:** Indicates radio connectivity and adequate battery power
- **Flashing red lights:** Indicates the battery voltage is critically low. Replace batteries

M. Power Button

N. Bind Button

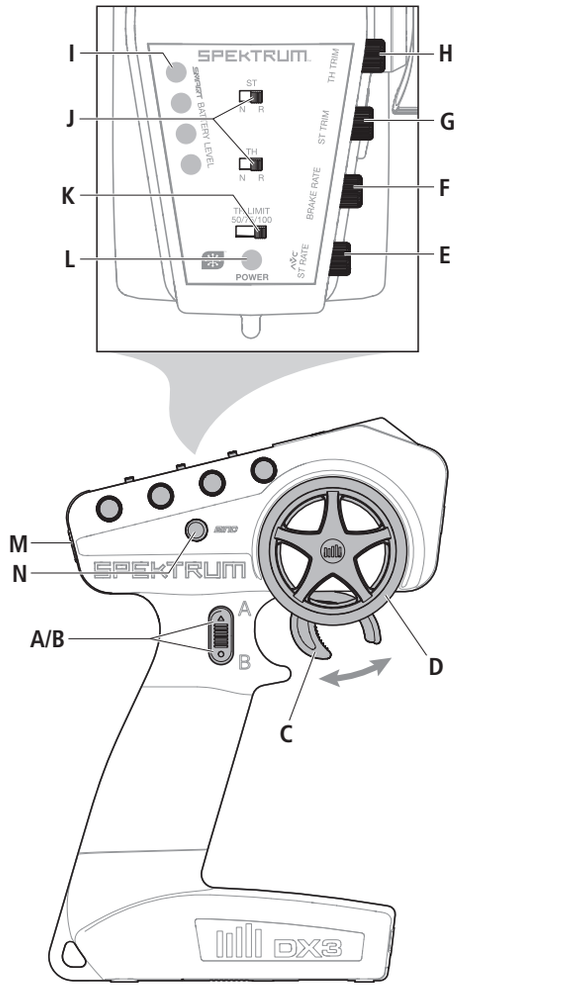

TRANSMITTER BATTERY INSTALLATION

This transmitter requires 4 AA batteries.

1. Remove the battery cover from the transmitter.
2. Install the batteries as shown.
3. Install the battery cover.

CAUTION: Never remove the transmitter batteries while the model is powered ON. Loss of model control, damage, or injury may occur.

CAUTION: If using rechargeable batteries, charge only rechargeable batteries. Charging non-rechargeable batteries may cause the batteries to burst, resulting in injury to persons and/or damage to property.

CAUTION: Risk of explosion if battery is replaced by an incorrect type. Dispose of used batteries according to national regulations.

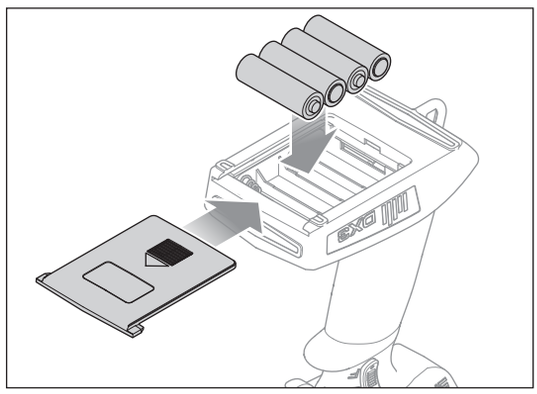

SR6100AT AVC TECHNOLOGY TELEMETRY RECEIVER

AUX CHANNELS

The Aux channels can operate as additional servo channels, or as a power supply for a personal transponder.

If AVC is active, only 4 channels; Steering, Throttle, AUX3 and AUX4 are operational. The reaming Aux channels can be used to power a personal transponder or lights.

If AVC is disabled (see DISABLING AVC TECHNOLOGY STABILITY ASSIST FUNCTION), all 6 channels including the Aux channels can operate as servo channels.

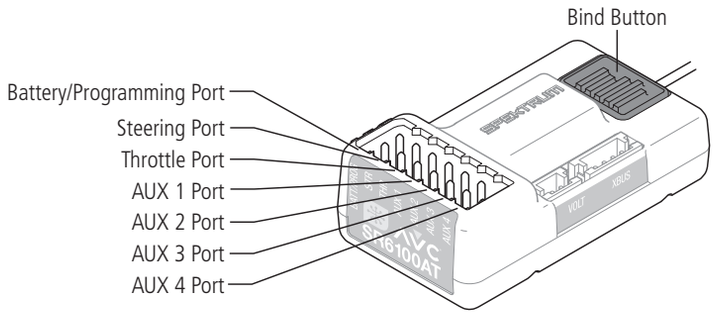

BINDING AND CALIBRATING THE RECEIVER

Binding is the process of linking the SR6100AT receiver to your Spektrum transmitter. The AVC features on the receiver can be enabled or disabled during the binding process.

IMPORTANT: You must calibrate the SR6100AT receiver each time it is placed in bind mode, regardless of AVC being enabled or disabled.

Upon initial setup after the first bind, the model must be configured for servo direction, trim and travel. Then the receiver must be rebound and calibrated to those settings for proper operation. Center the steering trim and throttle trim on the transmitter before beginning.

1. Press and hold the bind button on the receiver.
2. Power on the receiver. The orange LED flashes, indicating the receiver is in bind mode. Release the bind button after the orange LED illuminates.
3. Put your transmitter in bind mode. The bind process is complete when the orange LED on the receiver remains lit. The receiver is now bound to the transmitter but must be calibrated before it will operate.
4. Pull the transmitter trigger to full throttle, pause, then return the trigger to center.

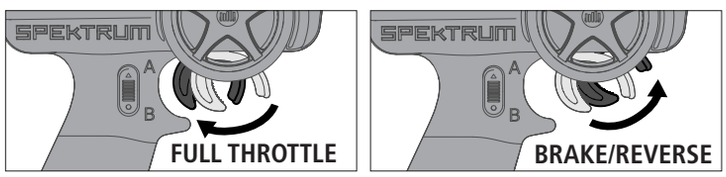

5. Push the transmitter trigger to full brake, pause, then return the trigger to center.
6. Turn the transmitter steering wheel to full right, pause, then return the wheel to center.
7. Turn the transmitter steering wheel to full left, pause, then return the steering wheel to center. The orange LED flashes to confirm the settings have been accepted.
8. Turn off the vehicle to complete the binding and calibration process.

CAUTION: When the bind process is complete, the throttle and steering channels are active. Keep hands and loose objects away from all spinning parts on the vehicle.

IMPORTANT: You must rebind the transmitter and receiver if you:

- Change the servo reversing after binding
- Change the travel after binding
- Change the receiver mounting orientation

DISABLING AVC® TECHNOLOGY STABILITY ASSIST

If you participate in organized racing, you might need to turn off AVC technology. To turn off AVC technology:

1. Connect power to the receiver and quickly press and release the bind button three times (within 1.5 seconds).
2. Press and hold the bind button and to put the receiver in bind mode. release the buton when the LED starts to flash rapidly, indicating it is in bind mode.

When the AVC system has been disabled, the LED on the receiver will show three flashes upon power up, and then remain lit. The receiver is bound and operating normally when the LED remains illuminated.

TIP: If the AVC feature in the receiver is active and the AVC menu in the transmitter is Inhibited, AVC functions will default to the AUX 1 and AUX 2 operation, and in this scenario, AVC will not work correctly.

FAILSAFE

In the unlikely event that the radio link is lost during use, the receiver will drive the throttle channel to the neutral position. If the receiver is powered on prior to turning on the transmitter, the receiver will enter the failsafe mode, driving the throttle channel to the neutral position. When the transmitter is turned on, normal control is resumed.

IMPORTANT: Failsafe activates only in the event that signal is lost from the transmitter. Failsafe will NOT activate in the event that receiver battery power decreases below the recommended minimums or power to the receiver is lost.

DRIVING PRECAUTIONS

- Maintain sight of the vehicle at all times.
- Routinely inspect the vehicle for loose wheel hardware.
- Routinely inspect the steering assembly for any loose hardware. Driving the vehicle off-road can cause fasteners to loosen over time.
- Do not drive the vehicle in tall grass. Doing so can damage the vehicle or electronics.

CAUTION: Do not discharge a Li-Po battery below 3V per cell. Batteries discharged to a voltage lower than the lowest approved voltage may become damaged, resulting in loss of performance and potential fire when batteries are charged.

IMPORTANT: Keep the wires away from any moving parts.

BEFORE RUNNING THE VEHICLE

1. Check for free suspension movement. All suspension arms and steering components should move freely. Any binds will cause the vehicle to handle poorly.

TIP: To increase the ride height and ground clearance of your vehicle, screw down the shock collars to compress the springs.

2. Charge a battery pack. Always charge the battery pack as per the battery and/or charger manufacturers' instructions.
3. Set the transmitter steering trim. Follow the instructions to set the steering trim/subtrim so that the vehicle drives straight with no input to the steering.
4. Perform a Control Direction Test.

POWERING ON THE VEHICLE

1. Center the ST TRIM and TH TRIM dials on the transmitter and turn it on.
2. Install a fully charged battery pack per the **Installing the Battery** section.
3. Power on the ESC.

IMPORTANT: The vehicle MUST remain on a flat, level surface and motionless for at least 5 seconds.

- Do not apply forward or reverse throttle if the vehicle is stuck. Applying throttle in this instance can damage the motor or ESC.
- After driving the vehicle, allow the electronics to cool before driving the vehicle again.

IMPORTANT: Keep wires away from all moving parts.

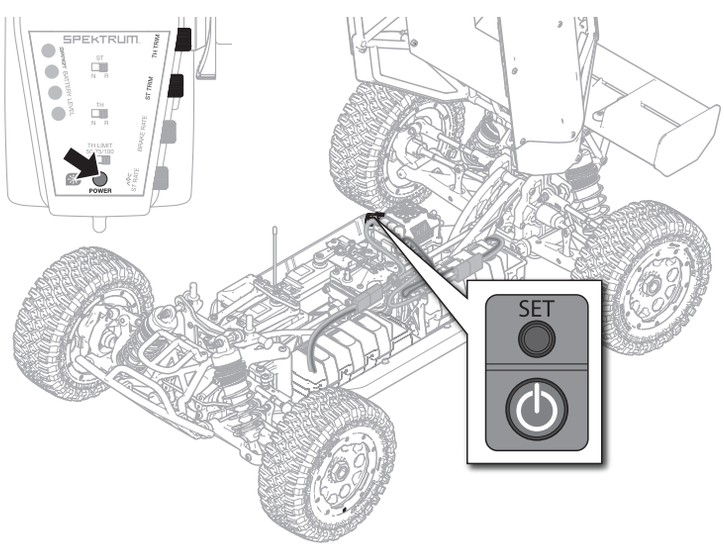

AVC® SENSITIVITY

The ST RATE dial on the DX3 adjusts the sensitivity, or stability, value in the receiver. If you increase the sensitivity, the AVC® system becomes more sensitive to the vehicle drifting left or right. You would use maximum sensitivity during high speed driving or drag racing, when you want the vehicle to stay in a straight line.

Turn the ST RATE knob counter-clockwise to reduce the sensitivity.

Turn the ST RATE knob clockwise to increase the sensitivity.

IMPORTANT: The ST RATE knob will only adjust the sensitivity when the transmitter is bound to a DSMR® receiver. When the transmitter is bound to a DSM®, DSM2® or DSM Marine receiver, the ST RATE knob controls the steering dual rate.

CHANGING THE TRAVEL ADJUST SETTINGS

1. Hold the trigger in the full brake position and turn the steering wheel to Full Right while powering on the transmitter. The LED flashes rapidly, indicating the programming mode is active.
2. **Throttle End Point:** Continue holding full throttle. Turn the TH TRIM knob to adjust the full throttle end point.
3. **Brake End Point:** Hold the trigger in the full brake position. Turn the TH TRIM knob to adjust the full brake end point. Return the trigger to the center position.
4. **Left Steering End Point:** Hold the steering wheel in the full left position. Turn the ST TRIM knob to adjust the left end point.
5. **Right Steering End Point:** Hold the steering wheel in the full right position. Turn the ST TRIM knob to adjust the right end point. Return the steering wheel to the center position.
6. Power off the transmitter to save the travel adjust settings. The minimum Travel is 75%, and the Maximum travel is 150%.

IMPORTANT: If the travel is changed on the DX3, you must rebind and calibrate the SR6100AT.

RUN TIME

The largest factor in run time is the capacity of the battery pack. A larger mAh rating increases the amount of run time experienced.

The condition of a battery pack is also an important factor in both run time and speed. The battery connectors may become hot during driving. Batteries will lose performance and capacity over time.

Driving the vehicle from a stop to full speed repeatedly will damage the batteries and electronics over time. Sudden acceleration will also lead to shorter run times.

TO IMPROVE RUN TIMES

- Keep your vehicle clean and well maintained.
- Allow more airflow to the ESC and motor.
- Change the gearing to a lower ratio. A lower ratio decreases the operating temperature of the electronics. Use a smaller pinion gear or larger spur gear to lower the gear ratio.
- Use a battery pack with a higher mAh rating.
- Use the optimum charger to charge battery packs (Visit your local hobby dealer for more information).

CONTROL DIRECTION TEST

Place the vehicle on a stand supporting the chassis so the wheels are off the ground during the steering and throttle tests. Verify all the controls work correctly before turning it on with the wheels on the ground.

STEERING

1. Move the steering wheel Left and Right and observe the direction the front wheels move.
2. If the wheels move the opposite direction, reverse the STR channel.

THROTTLE

1. Pull the Throttle trigger to move the vehicle forward.
2. If the vehicle moves backward, reverse the THR channel.

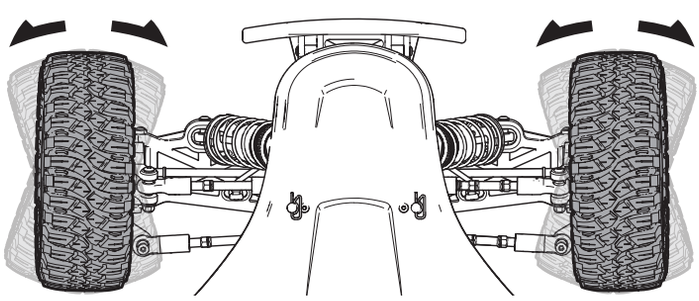

ADJUSTING STEERING AND THROTTLE TRIMS

STEERING TRIM

The vehicle should maintain a straight line without any steering wheel input. If not, adjust the STR Trim knob so the wheels maintain a straight line without having to turn the steering wheel.

THROTTLE TRIM

Trim the vehicle with the wheels off the ground. If the wheels rotate after the vehicle is powered ON, adjust the TH Trim knob until they stop.

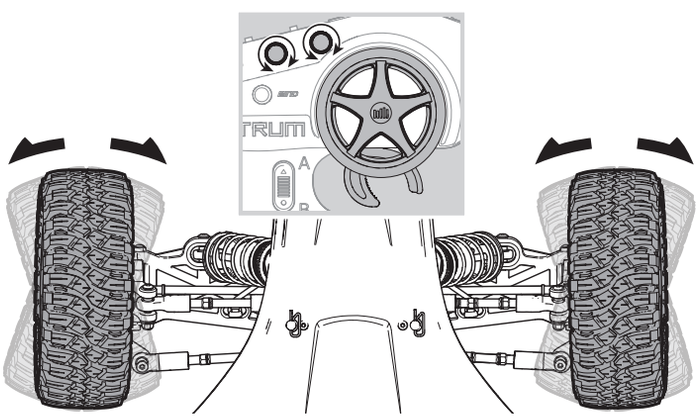

VEHICLE TUNING

This Vehicle Tuning Guide will take you through the basic tuning adjustments and will describe the changes to the handling of your vehicle. Before making any setup changes, make sure all suspension parts move freely and that there are no broken or dislodged parts. Only make one change at a time to clearly feel the impact of that change. If a change does not provide the desired impact, return to the previous setting and consider a different setup change. Please note that the factory setup has proven to be reliable, consistent and easy to drive.

CAMBER

Camber Links		Characteristics
Lowering the Link	Front	Increases off-power steering and makes the vehicle more responsive. Handling consistency may decrease as off-power steering increases
	Rear	Increases off-power chassis rotation and makes the vehicle more responsive
Raising the Link	Front	Reduces off-power steering and provides greater handling consistency
	Rear	Reduces off-power chassis rotation and provides greater handling consistency

Always use negative camber (tires leaning in). Standard negative camber settings range from -1/2 to -3 degrees.

FACTORY SETTING

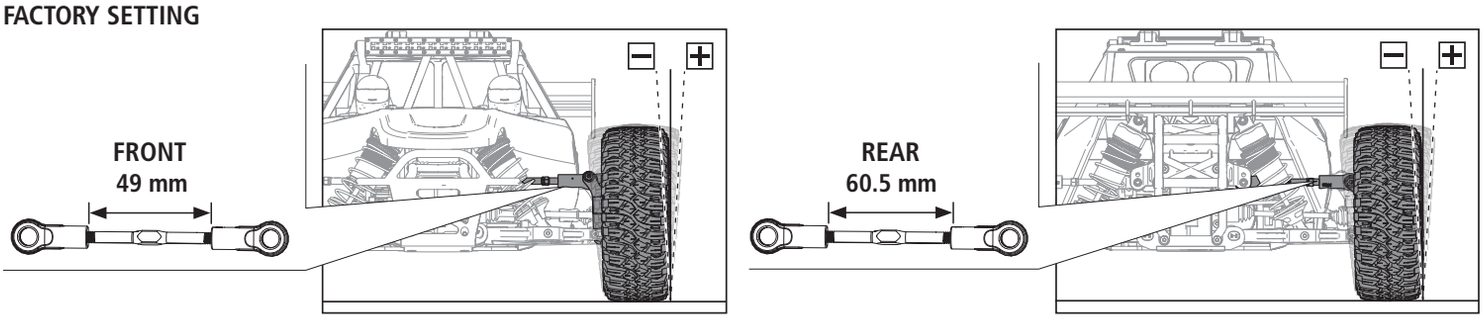

Camber		Characteristics
More Negative Camber	Front	Quicker reaction with more steering
	Rear	Less rear traction on entry and mid-corner
Less Negative Camber	Front	Slower reaction with less steering
	Rear	More traction on entry and mid-corner

DROOP

Always measure the droop (down travel) with the shocks on the vehicle. Droop is measured from the center of the top shock mount to the center of the bottom shock screw. More front and rear droop will accelerate better in bumps when going straight, but can cause the vehicle to traction roll in rough turns. Less front and rear droop will slide over bumps better in turns and may be better on high-speed and high-traction tracks.

Droop		Characteristics
More	Front	Increases on-power steering and lets the rear of the vehicle roll more when applying throttle
	Rear	Increases off-power steering and lets the front of the vehicle roll more when removing throttle
Less	Front	Decrease steering response
	Rear	Good for high-traction surfaces

SHOCK OIL

Adjust oil weight when there is a drastic temperature change (20 - 25° F/12 - 14°C)

Shock Oil	Characteristics
Lighter	Responds quicker and creates more chassis roll
	Use lighter oil as it gets colder
Heavier	Reacts slower and creates less chassis roll
	Use heavier oil as it gets warmer

SHOCK SPRINGS

Springs		Characteristics
Softer	Front	Produce more steering
	Rear	Helpful on rough tracks but may hamper jumping ability and allow the chassis to bottom out much easier
Firmer	Front	Decrease steering response
	Rear	Good for big jumps and high-traction surfaces

SHOCK MOUNTING POSITIONS

Moving the shocks in on the tower makes the vehicle more forgiving. Moving the shocks out on the tower makes the vehicle more responsive and better for technical tracks.

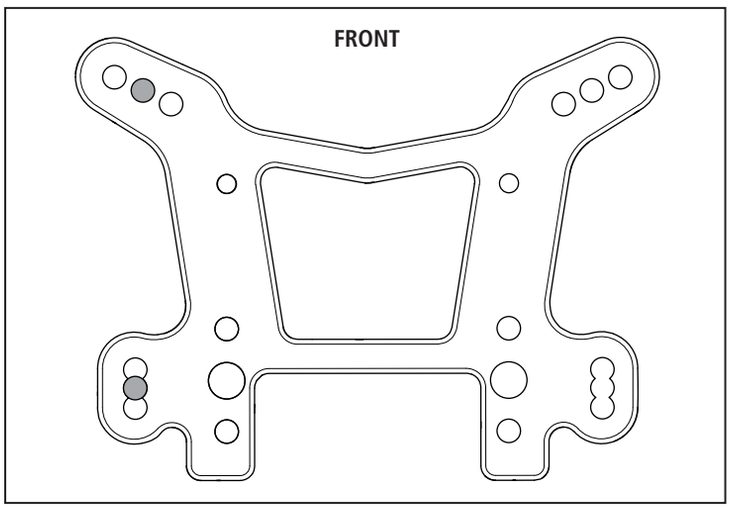

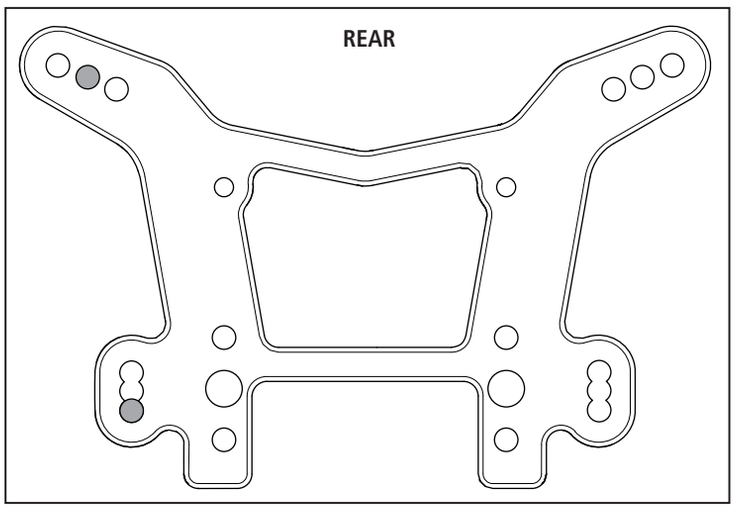

FRONT TOE

Never run front toe-in which can cause limited steeering response.

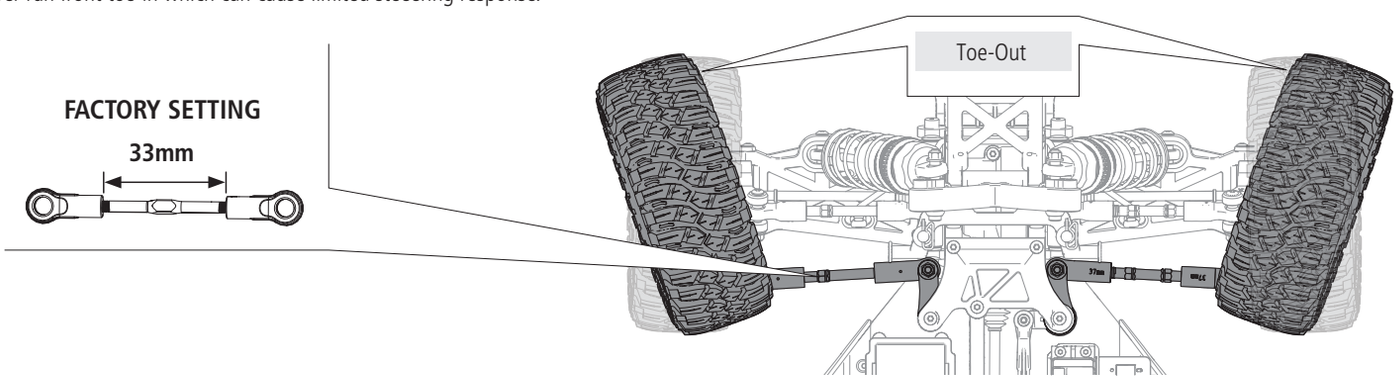

Front Toe	Characteristics
Toe-Out	Toe-out (shorter steering rods) increases steering response when entering the turn and straight line stability; however, it will decrease on-power steering

SWAY BARS

The vehicle is equipped with medium (4mm) sway bars on the front and rear.

Sway Bars		Characteristics
Thinner	Front	Increases front off-power traction, but has less on-power steering
	Rear	Increases rear traction and decreases on-power steering
Thicker	Front	Decreases off-power traction with smoother steering entering the turn, but has more on-power steering
	Rear	Increases stability in turns and on-power steering

Tip: Thicker sway bars are more stable on high-speed, high-traction tracks.

DIFFERENTIALS

Differential	Weight Oil	Light Weight Oil	Heavier Weight Oil
Front	30,000	Increases off-power steering. Oil that is too thin will make diff action inconsistent	Increases off-power stability and on-power steering
Center	50,000	Has less forward drive and can unload the drivetrain easier under acceleration, which can be good on rough and slick tracks	More acceleration and increases on-power steering, but decreases off-power steering. Thicker center diff oil is better on high traction/smooth tracks
Rear	30,000	Has more side traction and increased steering in the middle of a turn	Less steering in the middle of the turn but more forward traction

SPEKTRUM™ FIRMA™ 780KV BRUSHLESS MOTOR

PRECAUTIONS

- Never touch moving parts.
- Never disassemble while the batteries are installed.
- Always let parts cool before touching.

GEARING

Installing a pinion gear with fewer teeth or a spur gear with more teeth will provide greater torque but will reduce top speed. Likewise, a pinion gear with more teeth or a spur gear with fewer teeth will reduce torque and increase top speed. Care should be taken when installing larger pinion gears as this can "overgear" the vehicle, resulting in overheating of the motor and ESC. When testing different gearing options, pay close attention to the temperature of the motor and speed control to ensure you are operating within the temperature range of the components. The motor or ESC should never be so hot that it cannot be touched. If temperatures are too hot, a different gearing combination with a lower pinion gear and/or higher spur gear is suggested.

CHANGING THE PINION GEAR/GEAR RATIO

1. Remove the screw holding the pinion gear cover in place.
2. Loosen the set screw and remove the installed pinion gear.
3. Loosen the motor screws and slide the motor back.
4. Place the new pinion on the end of the motor shaft so the set screw is located over the flat on the shaft.
5. Position it so the teeth line up with the spur gear and secure the pinion by tightening the set screw.
6. Set the gear mesh.

SETTING THE GEAR MESH

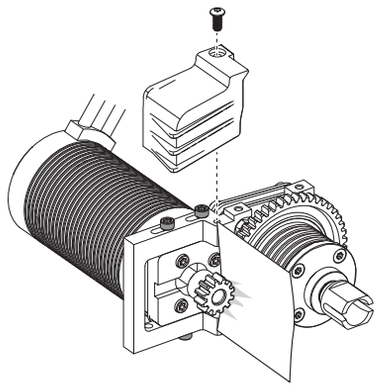

The gear mesh has already been set at the factory. Setting it is only necessary when changing motors or gears.

Proper gear mesh (how gear teeth meet) is important to the performance of the vehicle. When the gear mesh is too loose, the gears could be damaged. If the mesh is too tight, speed could be limited and the motor and ESC will overheat.

1. Loosen the motor screws and slide the motor back.
2. Put a small piece of paper between the pinion and spur gears.
3. Push the gears together while tightening the motor screws.
4. Remove the paper. Check the mesh at 3–5 different locations around the spur gear for a small amount of movement.
5. Install the gear cover.

TELEMETRY SETTINGS

If using the Spektrum SMART Telemetry, set the motor pole count to 4 and the rollout distance to 1.92" (49mm).

SPEKTRUM™ FIRMA™ SMART 160A BRUSHLESS ESC (SPMXSE1160)

SPECIFICATIONS

Type	Sensorless, SMART Throttle Compatible
Output	160A
Function	Forward/Brake–Forward/Brake Reverse
Input Voltage	3-8S LiPo
BEC Output	6V/8.4V@5A
Dimensions (LxWxH)	70mm x 77mm x 44mm
Weight	280 g

ESC LED STATUS

- No ESC LEDs will glow when there is no throttle input from the transmitter.
- The red ESC LED glows when there is any throttle input from the transmitter.

AUDIBLE WARNING TONES

1. **Input Voltage:** The ESC checks the input voltage when it is powered ON. If a voltage problem is detected, the ESC continuously sounds 2 beeps with a 1 second pause (xx-xx-xx). Power OFF the ESC and ensure the connections are secure and that the battery power is not too low for safe operation.
2. **Radio Connection:** The ESC checks radio signal input when it is powered ON. If a problem is detected, the ESC continuously sounds 1 beep with a 2 second pause (x--x--x). Power OFF the ESC and ensure the radio system is operating correctly.

NOTICE: Always disconnect the battery from the ESC after operating your vehicle. The ESC's switch only controls power to the receiver and servos. The ESC will continue to draw current when connected to the battery, resulting in possible damage to the battery through over discharge.

ESC CALIBRATION PROCEDURE

Complete the transmitter/receiver binding procedure prior to calibrating the ESC.

1. Set the transmitter throttle channel to 100% travel and center the throttle trim.
2. Connect a battery to the ESC battery lead.
3. Power on the transmitter.
4. Press and hold the SET button while turning on the ESC. Release the SET button when the **red** LED begins to flash, indicating the ESC is in calibration mode. The ESC will enter programming mode if the button is held for more than three seconds.

TIP: The red LED should be flashing when the ESC enters calibration mode. If the green LED is flashing the ESC has entered programming mode. Power off the ESC and repeat step 4, releasing the SET button when the red LED begins to flash.

5. With the transmitter throttle trigger at the neutral position, press and release the ESC SET button. The red LED will stop flashing, the green LED will flash one time and the motor will make a tone to indicate the neutral position has been accepted.
6. While holding the throttle trigger at the full throttle position, press and release the ESC SET button. The green LED will flash twice and the motor will make two tones to indicate the full throttle position has been accepted.
7. While holding the throttle trigger at the full brake position, press and release the SET button. The green LED will flash three times and the motor will make three tones to indicate the full brake position has been accepted.

The motor will operate normally after calibration is completed.

ESC FUNCTIONS AND MODES

The ESC includes programming options so you can adjust the way your vehicle performs. Refer to the included programming table to adjust the ESC for your driving conditions.

ESC PROGRAMMING PROCEDURE

Programming is accomplished using the SET button on the ON/OFF switch*.

1. Connect a fully charged battery to the ESC.
2. Power on the transmitter.
3. Power on the ESC.
4. Hold the SET button until the green LED flashes. Release the set button to enter programming mode.

TIP: To reset all programming items to the default values, press and hold the set button for five seconds.

5. Press and release the set button as needed to cycle through the programming items. The number of times the green LED flashes equals the programming item number given in the programming table.
6. When at the desired programming item, press and hold the set button until the red LED flashes to select the item.
7. Press and release the SET button to cycle through the values available for the programming item based on the number of times the LED flashes. Refer to the programming table.
8. Save the setting by pressing and holding the SET button for 3 seconds.
9. Power off the ESC to exit programming mode or to change other programming items.

*Other programming options include the Spektrum SMART Firma ESC Programming Box (SPMXCA200) and the SmartLink USB updating and programmer application. See SpektrumRC.com for more details about Spektrum SMART Firma ESCs.

PROGRAMMING TABLE

	Programming Value								■ Default Settings
Programming Items	1	2	3	4	5	6	7	8	9
1. Running Mode	Forward w/ Brake	**Forward/Reverse w/ Brake**							
2. Motor Direction	**CCW**	CW							
3. LiPo Cells	**Auto Calc.**	3S	3S	5S	6S	8S			
4. LVC Cutoff Voltage	Auto - High	**Auto - Med**	Auto - Low						
5. BEC Voltage	6.0V	**8.4V**							
6. Max Brake Force	25%	**50%**	75%	100%					
7. Max Reverse Force	**25%**	50%							
8. Punch Level	1	2	3	**4**	5				
9. Timing (degree)	**0.0**	3.75	7.5	11.25	15.0				

DESCRIPTIONS

1. **Running Mode**
   - *Forward Only with Brake*
     Intended for competition use, this mode allows only forward and brake controls.
   - *Forward/Reverse with Brake*
     This mode is the basic all-around mode, allowing forward, reverse and brake controls. To engage reverse while moving forward, apply the brake until the vehicle has come to a complete stop, release brake, then apply the brake again. While braking or in reverse, engaging the throttle will result in the vehicle immediately accelerating forward.
2. **Motor Direction**
   Choose which direction the motor rotates without changing the wiring.
3. **Li-Po Cells**
   Allows the ESC to automatically detect or manually set the number of cells in your Li-Po battery back.
4. **Low Voltage Cutoff**
   This function helps to prevent battery over-discharge. The ESC continuously monitors the battery's voltage. If the voltage falls below the voltage threshold for 2 seconds, the output power shuts off and the red LED flashes twice repeatedly.

   The cutoff threshold calculation is based on individual Li-Po cell voltage. For Ni-MH batteries, if the voltage battery pack is higher than 9.0V, it will be treated as a 3-cell Li-Po battery pack; if it is lower than 9.0V, it will be treated as a 2-cell Li-Po battery pack. Example: for a 8.0V Ni-MH battery pack used with a 2.6V/cell threshold, it will be treated as a 2-cell Li-Po battery pack and the low-voltage cut-off threshold will be 5.2V (2.6x2=5.2).
5. **BEC Voltage**
   The BEC (Battery Eliminator Circuit) provides a consistant voltage to the receiver from the motor battery. This option chooses the voltage output.
6. **Max Brake Force**
   Adjusts the maximum braking force. A higher value provides stronger braking, but can also cause the wheels to lock, resulting in loss of control of the car.
7. **Max Reverse Force**
   This parameter adjusts the maximum power when travelling in reverse.
8. **Start Mode (Punch)**
   Sets the initial throttle punch when the car accelerates. Level 1 gives a very soft initial acceleration and level 4 gives a stronger initial acceleration.
9. **Timing**
   Adjusts the motor drive current timing. More timing gives more performance, but can lower efficiency and cause damage to the motor and/or ESC by overload or overheating.

NOTICE: Always ensure the motor timing is set correctly. Failure to set the motor timing correctly can result in damage to the motor and ESC. Refer to the manufacturer instructions for recommended timing settings.

VEHICLE MAINTENANCE

The following items require semi-frequent maintenance. Always clean screw threads and apply removeable thread locking compound when threading machine screws into metal parts.

SHOCK DISASSEMBLY/CLEANING

Remove the shocks and service as needed. Replace worn parts.

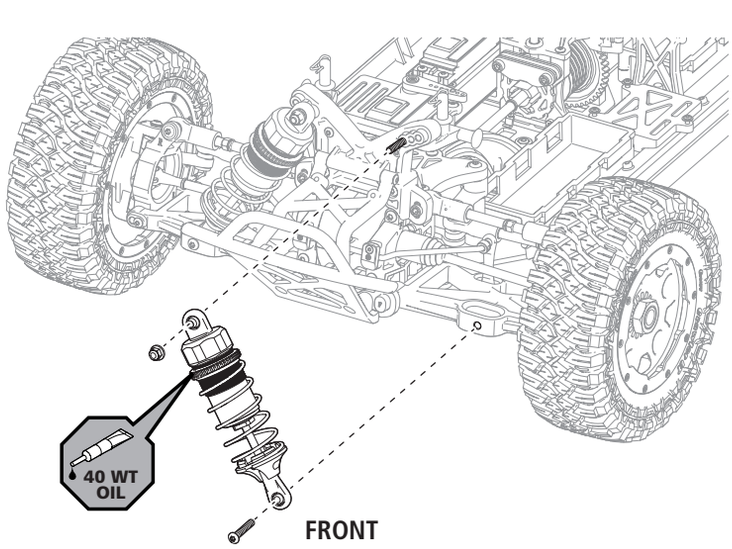

FRONT

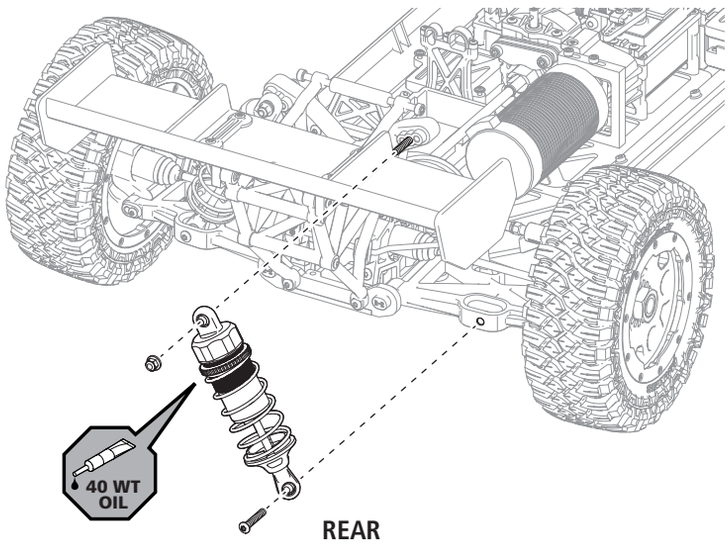

REAR

1. Pull the spring up and away from the lower cup. Slide the lower spring cup up and off of the shaft. Clean with a soft brush. Remove the shock boot.
2. Use the wheel wrench to hold the shock body and remove the top cap. Empty the fluid from out of the shock.
3. Hold the shaft with a multi-wrench and remove the shock end. Push the shaft into the shock body and remove through the top. Remove the lower shock cap, dust cover, O-rings and spacer. Clean the shock body. Install new O-rings, re-install the spacer, replace the O-ring and install the lower shock cap. DO NOT TIGHTEN. Install the shock shaft through the shock bottom and tighten the bottom cap. Re-install the boot and shock end on the shaft.

TIP: Clean the screw and internal threads in the shaft with a spray cleaner. Use Medium Strength Threadlock.

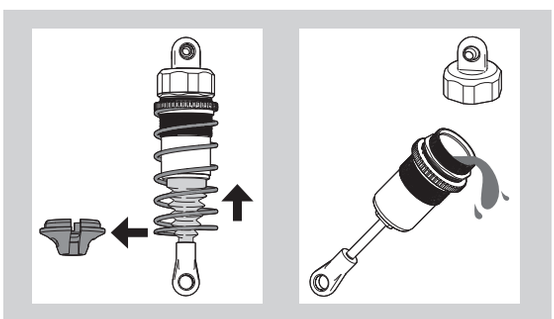

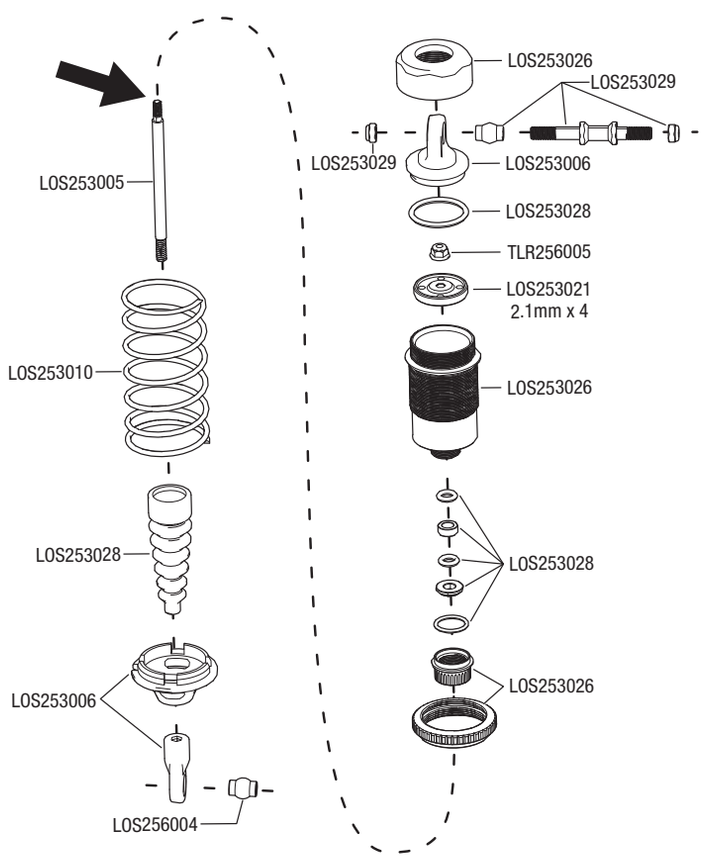

REFILLING/BLEEDING SHOCKS

1. Fill the shock body 5mm (0.2 in) from the top with 40wt silicone shock oil (TLR74025).
2. Slowly move the piston up and down 5 times, allowing air to rise to the top. Let the shock sit for 5 minutes.
3. With the piston all the way down, fill the shock body 1mm (0.04 in) from the top. Replace the shock cap, spring and spring cup.

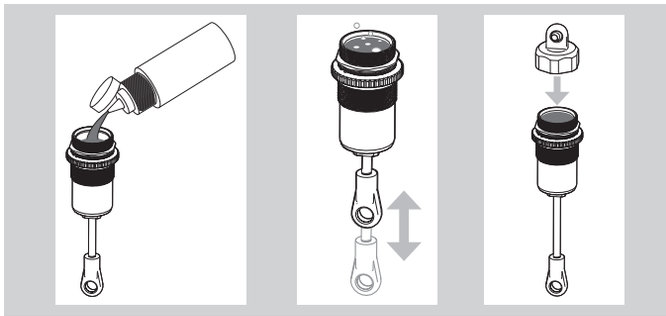

FRONT DIFFERENTIAL

1. Remove the front clip.
2. Remove the cover and differential.
3. Check the differential fluid and refill or replace as needed with DYN2656 (30,000CS) fluid. The fluid level should be about 0.12 in (3.0mm) from the top surface of the case. Do not overfill or the differential unit might leak.
4. Check the ring and pinion as well as the bevel gears in the differential. Replace as needed. If fluid is leaking at the drive cups, replace the O-rings. Apply more grease to the ring and pinion (LOSA99209).

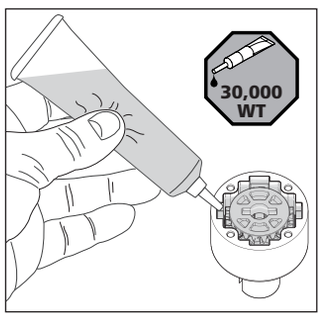

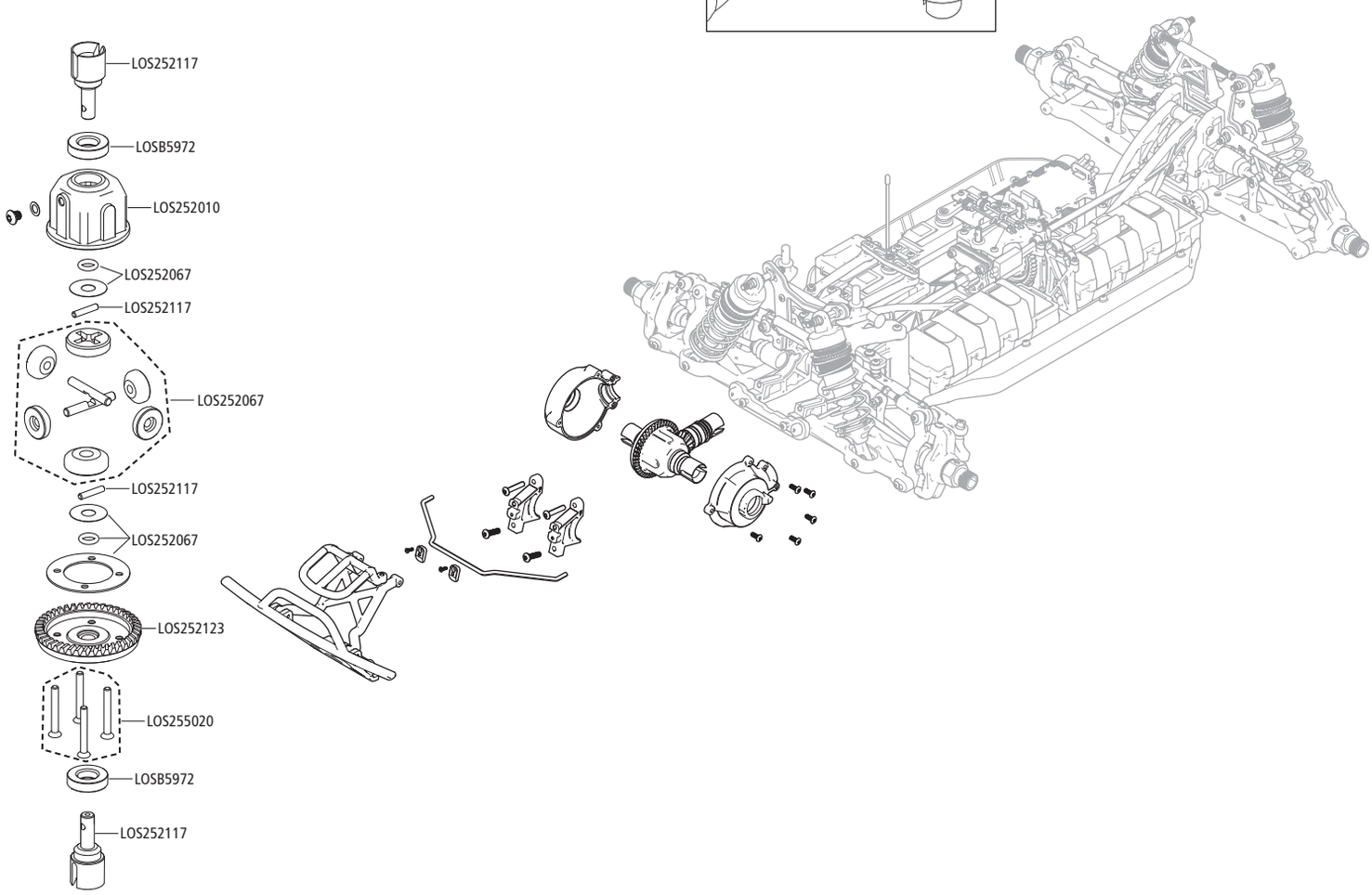

REAR DIFFERENTIAL

1. Remove the rear clip.
2. Remove the cover and differential.
3. Check the differential fluid and refill or replace as needed with DYN2656 (30,000CS) fluid. The fluid level should be about 0.12 in (3.0mm) from the top surface of the case. Do not overfill or the differential unit might leak.
4. Check the ring and pinion as well as the bevel gears in the differential. Replace as needed. If fluid is leaking at the drive cups, replace the O-rings. Apply more grease to the ring and pinion (LOSA99209).

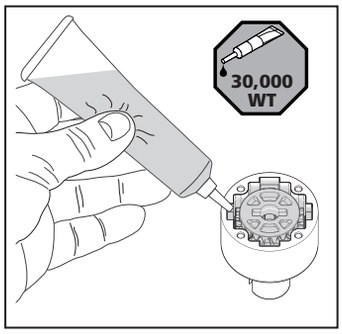

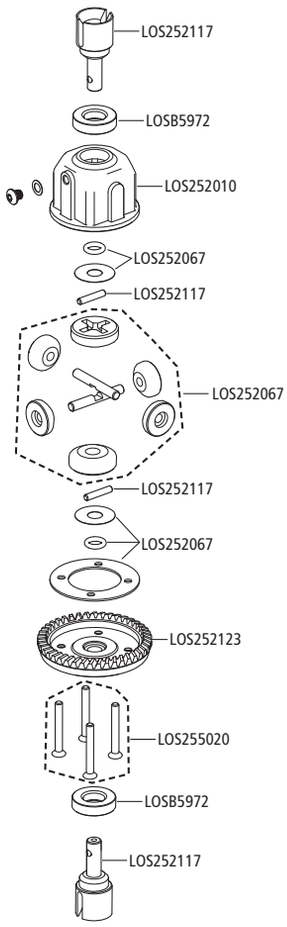

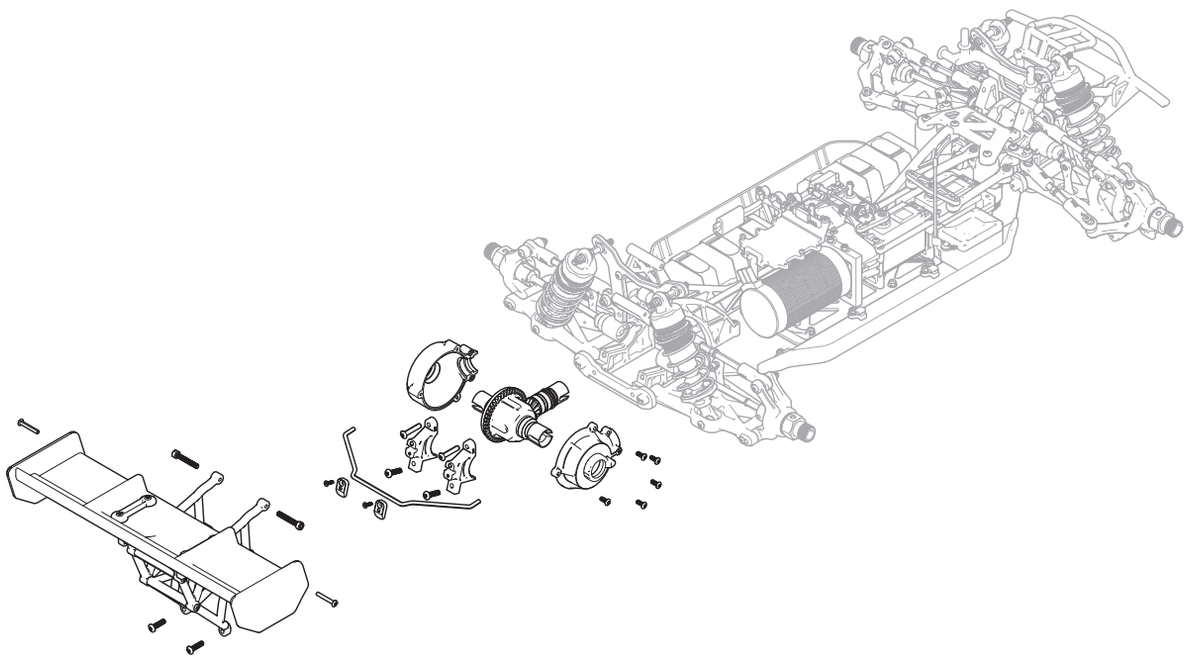

CENTER DIFFERENTIAL

1. Inspect the spur gear. Replace if worn or damaged.
2. Check the differential fluid and refill or replace as needed with DYN2657 (50,000CS) fluid. The fluid level should be about 0.12 in (3.0mm) from the top surface of the case. Do not overfill or the differential unit might leak.
3. Check the spur gear and pinion as well as the bevel gears in the differential. Replace as needed. If fluid is leaking at the drive cups, replace the O-rings.

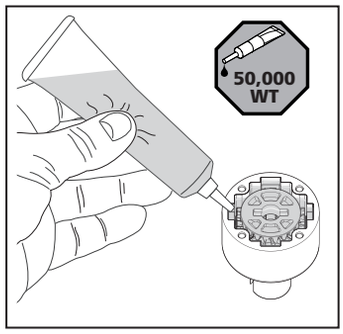

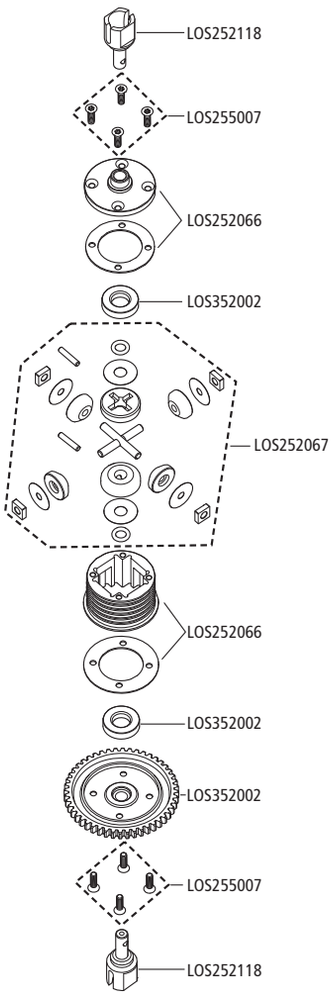

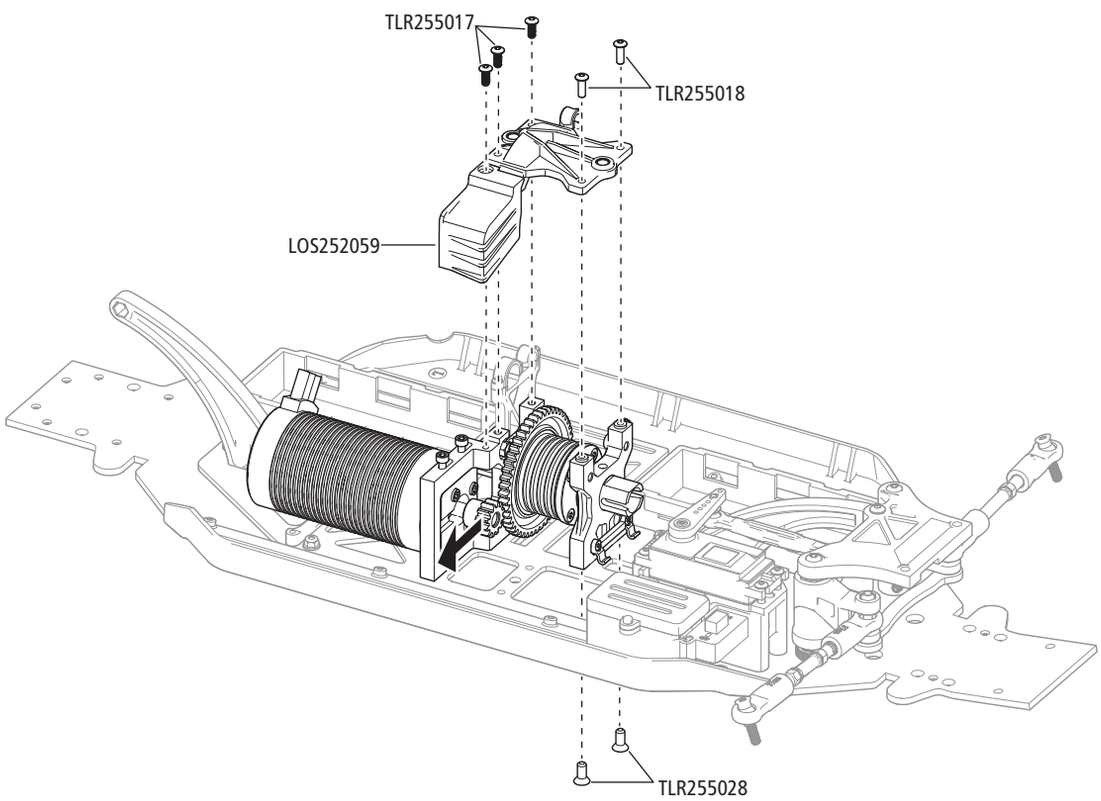

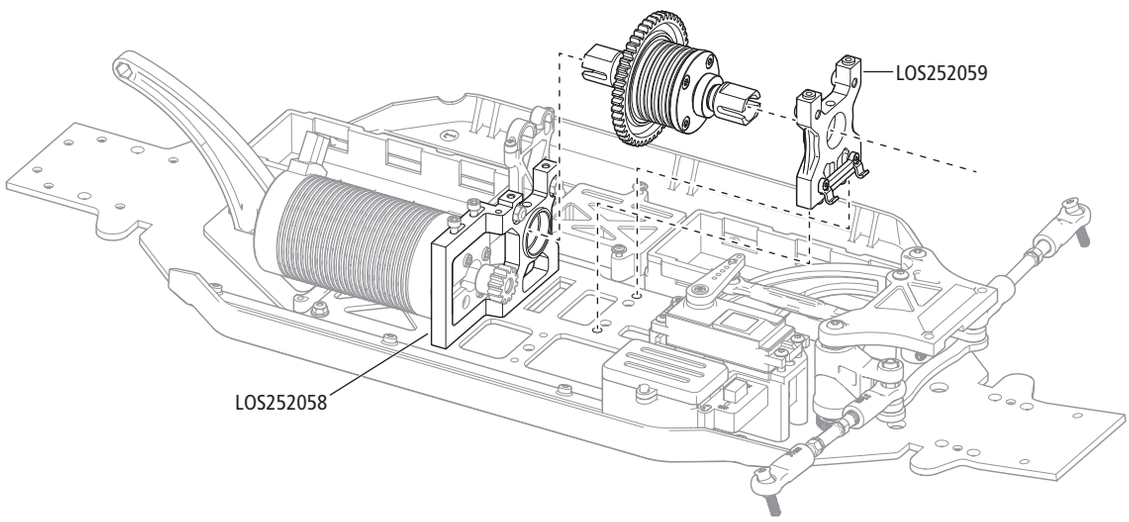

TROUBLESHOOTING GUIDE

PROBLEM	POSSIBLE CAUSE	SOLUTION
Vehicle does not operate	Battery not charged or plugged in	Charge battery/plug in
	ESC switch not "On"	Turn on ESC switch
	Transmitter not "On" or low battery	Turn on/replace batteries
Motor runs but wheels do not rotate	Pinion not meshing with spur gear	Adjust pinion/spur mesh
	Pinion spinning on motor shaft	Tighten pinion gear setscrew on motor shaft flat spot
	Transmission gears stripped	Replace transmission gears
	Drive pin broken	Check and replace drive pin
Steering does not work	Servo plug not in receiver properly	Make sure the steering servo plug is connected to the receiver steering channel, noting proper polarity
	Servo gears or motor damaged	Replace or repair servo
Will not turn one direction	Servo gears damaged	Replace or repair servo
Motor does not run	Motor wire solder joint is damaged	Resolder the motor wire with the proper equipment
	Motor wire broken	Repair or replace as needed
	ESC damaged	Contact Horizon Hobby Product Support
ESC gets hot	Motor over-geared	Use smaller pinion or larger spur gear
	Driveline bound up	Check wheels and transmission for binding
Poor run time and/or sluggish acceleration	Battery pack not fully charged	Recharge battery
	Charger not allowing full charge	Try another charger
	Driveline bound up	Check wheels, transmission for binding
Poor range and/or glitching	Transmitter batteries low	Check and replace
	Vehicle battery low	Recharge battery
	Loose plugs or wires	Check all wire connections and plugs

LIMITED WARRANTY

What this Warranty Covers—Horizon Hobby, LLC, (Horizon) warrants to the original purchaser that the product purchased (the "Product") will be free from defects in materials and workmanship for a period of 2 years from the date of purchase.

What is Not Covered—This warranty is not transferable and does not cover (i) cosmetic damage, (ii) damage due to acts of God, accident, misuse, abuse, negligence, commercial use, or due to improper use, installation, operation or maintenance, (iii) modification of or to any part of the Product, (iv) attempted service by anyone other than a Horizon Hobby authorized service center, (v) Product not purchased from an authorized Horizon dealer, or (vi) Product not compliant with applicable technical regulations or (vii) use that violates any applicable laws, rules, or regulations.

OTHER THAN THE EXPRESS WARRANTY ABOVE, HORIZON MAKES NO OTHER WARRANTY OR REPRESENTATION, AND HEREBY DISCLAIMS ANY AND ALL IMPLIED WARRANTIES, INCLUDING, WITHOUT LIMITATION, THE IMPLIED WARRANTIES OF NON-INFRINGEMENT, MERCHANTABILITY AND FITNESS FOR A PARTICULAR PURPOSE. THE PURCHASER ACKNOWLEDGES THAT THEY ALONE HAVE DETERMINED THAT THE PRODUCT WILL SUITABLY MEET THE REQUIREMENTS OF THE PURCHASER'S INTENDED USE.

Purchaser's Remedy—Horizon's sole obligation and purchaser's sole and exclusive remedy shall be that Horizon will, at its option, either (i) service, or (ii) replace, any Product determined by Horizon to be defective. Horizon reserves the right to inspect any and all Product(s) involved in a warranty claim. Service or replacement decisions are at the sole discretion of Horizon. Proof of purchase is required for all warranty claims. SERVICE OR REPLACEMENT AS PROVIDED UNDER THIS WARRANTY IS THE PURCHASER'S SOLE AND EXCLUSIVE REMEDY.

Limitation of Liability—HORIZON SHALL NOT BE LIABLE FOR SPECIAL, INDIRECT, INCIDENTAL OR CONSEQUENTIAL DAMAGES, LOSS OF PROFITS OR PRODUCTION OR COMMERCIAL LOSS IN ANY WAY, REGARDLESS OF WHETHER SUCH CLAIM IS BASED IN CONTRACT, WARRANTY, TORT, NEGLIGENCE, STRICT LIABILITY OR ANY OTHER THEORY OF LIABILITY, EVEN IF HORIZON HAS BEEN ADVISED OF THE POSSIBILITY OF SUCH DAMAGES. Further, in no event shall the liability of Horizon exceed the individual price of the Product on which liability is asserted. As Horizon has no control over use, setup, final assembly, modification or misuse, no liability shall be assumed nor accepted for any resulting damage or injury. By the act of use, setup or assembly, the user accepts all resulting liability. If you as the purchaser or user are not prepared to accept the liability associated with the use of the Product, purchaser is advised to return the Product immediately in new and unused condition to the place of purchase.

Law—These terms are governed by Illinois law (without regard to conflict of law principals). This warranty gives you specific legal rights, and you may also have other rights which vary from state to state. Horizon reserves the right to change or modify this warranty at any time without notice.

WARRANTY SERVICES

Questions, Assistance, and Services—Your local hobby store and/or place of purchase cannot provide warranty support or service. Once assembly, setup or use of the Product has been started, you must contact your local distributor or Horizon directly. This will enable Horizon to better answer your questions and service you in the event that you may need any assistance. For questions or assistance, please visit our website at www.horizonhobby.com, submit a Product Support Inquiry, or call the toll free telephone number referenced in the Warranty and Service Contact Information section to speak with a Product Support representative.

Inspection or Services—If this Product needs to be inspected or serviced and is compliant in the country you live and use the Product in, please use the Horizon Online Service Request submission process found on our website or call Horizon to obtain a Return Merchandise Authorization (RMA) number. Pack the Product securely using a shipping carton. Please note that original boxes may be included, but are not designed to withstand the rigors of shipping without additional protection. Ship via a carrier that provides tracking and insurance for lost or damaged parcels, as Horizon is not responsible for merchandise until it arrives and is accepted at our facility. An Online Service Request is available at http://www.horizonhobby.com/content/service-center_render-service-center. If you do not have internet access, please contact Horizon Product Support to obtain a RMA number along with instructions for submitting your product for service. When calling Horizon, you will be asked to provide your complete name, street address, email address and phone number where you can be reached during business hours. When sending product into Horizon, please include your RMA number, a list of the included items, and a brief summary of the problem. A copy of your original sales receipt must be included for warranty consideration. Be sure your name, address, and RMA number are clearly written on the outside of the shipping carton.

NOTICE: Do not ship Li-Po batteries to Horizon. If you have any issue with a Li-Po battery, please contact the appropriate Horizon Product Support office.

Warranty Requirements—For Warranty consideration, you must include your original sales receipt verifying the proof-of-purchase date. Provided warranty conditions have been met, your Product will be serviced or replaced free of charge. Service or replacement decisions are at the sole discretion of Horizon.

Non-Warranty Service—Should your service not be covered by warranty, service will be completed and payment will be required without notification or estimate of the expense unless the expense exceeds 50% of the retail purchase cost. By submitting the item for service you are agreeing to payment of the service without notification. Service estimates are available upon request. You must include this request with your item submitted for service. Non-warranty service estimates will be billed a minimum of ½ hour of labor. In addition you will be billed for return freight. Horizon accepts money orders and cashier's checks, as well as Visa, MasterCard, American Express, and Discover cards. By submitting any item to Horizon for service, you are agreeing to Horizon's Terms and Conditions found on our website http://www.horizonhobby.com/content/service-center_render-service-center.

ATTENTION: Horizon service is limited to Product compliant in the country of use and ownership. If received, a non-compliant Product will not be serviced. Further, the sender will be responsible for arranging return shipment of the un-serviced Product, through a carrier of the sender's choice and at the sender's expense. Horizon will hold non-compliant Product for a period of 60 days from notification, after which it will be discarded.

10/15

WARRANTY AND SERVICE CONTACT INFORMATION

Country of Purchase	Horizon Hobby	Contact Information	Address
United States of America	Horizon Service Center (Repairs and Repair Requests)	servicecenter.horizonhobby.com/RequestForm/	2904 Research Rd. Champaign, Illinois, 61822 USA
	Horizon Product Support (Product Technical Assistance)	productsupport@horizonhobby.com 877-504-0233	
	Sales	websales@horizonhobby.com 800-338-4639	
European Union	Horizon Technischer Service	service@horizonhobby.eu +49 (0) 4121 2655 100	Hanskampring 9 D 22885 Barsbüttel, Germany
	Sales: Horizon Hobby GmbH		

FCC AND CANADA COMPLIANCE INFORMATION

Contains FCC ID: BRWKATY1T | BRWSR6100AT

This equipment complies with FCC and IC radiation exposure limits set forth for an uncontrolled environment. This equipment should be installed and operated with minimum distance 20cm between the radiator and/or antenna and your body (excluding fingers, hands, wrists, ankles and feet). This transmitter must not be co-located or operating in conjunction with any other antenna or transmitter.

Supplier's Declaration of Conformity

This device complies with part 15 of the FCC Rules. Operation is subject to the following two conditions: (1) This device may not cause harmful interference, and (2) this device must accept any interference received, including interference that may cause undesired operation.

CAUTION: Changes or modifications not expressly approved by the party responsible for compliance could void the user's authority to operate the equipment.

NOTE: This equipment has been tested and found to comply with the limits for a Class B digital device, pursuant to part 15 of the FCC Rules. These limits are designed to provide reasonable protection against harmful interference in a residential installation. This equipment generates, uses and can radiate radio frequency energy and, if not installed and used in accordance with the instructions, may cause harmful interference to radio communications. However, there is no guarantee that interference will not occur in a particular installation. If this equipment does cause harmful interference to radio or television reception, which can be determined by turning the equipment off and on, the user is encouraged to try to correct the interference by one or more of the following measures:

- Reorient or relocate the receiving antenna.
- Increase the separation between the equipment and receiver.
- Connect the equipment into an outlet on a circuit different from that to which the receiver is connected.
- Consult the dealer or an experienced radio/TV technician for help.

Horizon Hobby, LLC
2904 Research Rd., Champaign, IL 61822
Email: compliance@horizonhobby.com
Web: HorizonHobby.com

IC INFORMATION

CAN ICES-3 (B)/NMB-3(B)
Contains IC: 6157A-KATY1T
6157A-SR6100AT

This device contains license-exempt transmitter(s)/receivers(s) that comply with Innovation, Science, and Economic Development Canada's license-exempt RSS(s). Operation is subject to the following 2 conditions:

1. This device may not cause interference.
2. This device must accept any interference, including interference that may cause undesired operation of the device.

COMPLIANCE INFORMATION FOR THE EUROPEAN UNION

EU Compliance Statement:

Hereby, Horizon Hobby, LLC declares that the device is in compliance with the following: EU RED 2014/53/EU; RoHS 2 Directive 2011/65/EU; RoHS 3 Directive - Amending 2011/65/EU Annex II 2015/863.

The full text of the EU declaration of conformity is available at the following internet address: https://www.horizonhobby.com/content/support-render-compliance.

NOTE: This product contains batteries that are covered under the 2006/66/EC European Directive, which cannot be disposed of with normal household waste. Please follow local regulations.

Wireless Frequency Range and Wireless Output Power:

Transmitter:	Receiver:
2402 – 2478MHz	2405 – 2478MHz
17.7dBm	19.39dBm

Australia/New Zealand

E328

EU Manufacturer of Record:
Horizon Hobby, LLC
2904 Research Road
Champaign, IL 61822 USA

EU Importer of Record:
Horizon Hobby, GmbH
Hanskampring 9
22885 Barsbüttel Germany

WEEE NOTICE:

This appliance is labeled in accordance with European Directive 2012/19/EU concerning waste of electrical and electronic equipment (WEEE). This label indicates that this product should not be disposed of with household waste. It should be deposited at an appropriate facility to enable recovery and recycling.

HARDWARE // ZUBEHÖR // VISSERIE ET ACCESSOIRES // VITI E PARTI ACCESSORI

M3 x 10mm (LOS255005)

M3 x 22mm (LOS255001)

M5 x 30mm (LOS255001)

M5 x 35mm (LOS255001)

M5 x 45mm (LOS255001)

M6 x 30mm (LOS255001)

M4 x 4mm (LOS255000)

M5 x 5mm (LOS255000)

M6 x 5mm (LOS255000)

M6 x 12mm (LOS255000)

3 x 8mm (LOS255002)

M5 x 20mm (LOS255002)

M4 x 12mm (LOS255002)

M4 x 20mm (LOS255002)

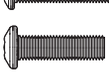
M5 x 18mm (LOS255002)

M5 x 20mm (LOS255002)

M5 x 24mm (LOS255002)

M5 x 28mm (LOS255002)

M5 x 35mm (LOS255002)

M5 x 50mm (LOS255002)

M2.5 x 10mm (LOS255003)

M3 x 10mm (LOS255003)

M4 x 12mm (LOS255003)

M4 x 22mm (LOS255003)

M5 x 14mm (LOS255003)

M5 x 20mm (LOS255003)

M5 x 32mm (LOS255003)

M5 x 40mm (LOS255003)

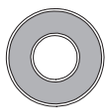
8 x 19 x 6mm (LOS257000)

10 x 22 x 6mm (LOS257001)

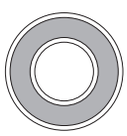
12 x 24 x 6mm (LOSB5972)

7 x 10 x 4mm (LOS257002)

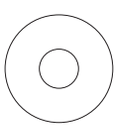
8 x 22 x 0.2mm (LOS256001)

13 x 16 x 0.3mm (LOS256001)

10.1 x 14 x .25mm (LOS256001)

4 x 10 x 1mm (LOS256001)

M4 (LOS256000)

M5 (LOS256000)

M5 (LOS256000)

LOS256005

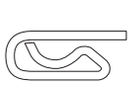
LOS256005

REPLACEMENT PARTS // TEILELISTE // LISTE DES PIÈCES DE RECHANGE // ELENCO DEI RICAMBI

Part #	English	Deutsch	Français	Italiano
LOS250019	LED Light Bar Set:DBXL-E	LED-Leuchtbalken-Set: DBXL-E	Ensemble de rampe d'éclairage à DEL : DBXL-E	Set barra a LED: DBXL-E
LOS250020	Roll Cage Screw Set: DBXL-E	Überrollkäfig-Schraubensatz: DBXL-E	Ensemble de vis de cage de retournement : DBXL-E	Set viti scocca di sicurezza: DBXL-E
LOS250021	Body Mounting Screw Set: DBXL-E	Gehäusehalterung-Schraubensatz: DBXL-E	Ensemble de vis de montage de carrosserie : DBXL-E	Set viti montaggio scocca: DBXL-E
LOS250043	BodySet,Screened,FOX: DBXL-E 2.	Gehäuse-Set, abgeschirmt, FOX: DBXL-E 2	Ensemble de carrosserie, sérigraphié, FOX : DBXL-E 2	Carrozzeria, schermata, FOX: DBXL-E 2
LOS250044	BodySet,Screened,LOSI:DBXL-E 2.	Gehäuse-Set, abgeschirmt, LOSI: DBXL-E 2	Ensemble de carrosserie, sérigraphié, LOSI : DBXL-E 2	Carrozzeria, schermata, LOSI: DBXL-E 2
LOS251046	Wing, Black	Flügel, schwarz	Aile, noire	Alettone, nero
LOS251045	Wing Mount, Complete: DBXL-E	Flügelhalterung, vollständig: DBXL-E	Support d'aile, complet : DBXL-E	Supporto alettone, completo: DBXL-E
LOS251048	Battery Strap (6): DBXL-E	Akku-Klemme (6): DBXL-E	Sangle de batterie (6) : DBXL-E	Fascetta batteria (6): DBXL-E
LOS251053	Roll Cage,Flip,Complete: DBXL-E	Überrollkäfig, Schalter, vollständig: DBXL-E	Cage de retournement, basculement, complète : DBXL-E	Scocca di sicurezza, completa: DBXL-E
LOS251090	Chassis Set, 4mmBlack:DBXL-E 2.	Karosseriesatz, 4 mm, schwarz: DBXL-E 2.	Ensemble de châssis, 4 mm noir : DBXL-E 2.	Set telaio, 4 mm, nero: DBXL-E 2.
LOS251092	StrPst,Tube,SrvoSprng:DBXL-E 2.	Lenkungsteile, Rohr, Servo-Feder: DBXL-E 2.	StrPst,Tube,SrvoSprng : DBXL-E 2.	Montante sterzo, tubo molla servo: DBXL-E 2.
LOS251093	DualSide,StSrvoArm,AL:DBXL-E 2.	Doppelseitig, Seitenruder-Servoarm, DBXL-E 2.	Deux côtés,StSrvoArm,AL : DBXL-E 2.	Braccio servo sterzo, doppio lato, alluminio: DBXL-E 2.
LOS251094	Steering Links (2): DBXL-E 2.0	Lenkstangen (2): DBXL-E 2.0	Bras de direction (2) : DBXL-E 2.0	Rinvii sterzo (2): DBXL-E 2.0
LOS251095	SteeringRack&Hardware:DBXL-E 2.	Zahnstange & Hardware: DBXL-E 2.	Crémaillère de direction et quincaillerie : DBXL-E 2.	Cremagliera sterzo e viteria: DBXL-E 2.
LOS251096	Turnbuckle Set (6): DBXL-E 2.0	Spannschraubensatz (6): DBXL-E 2.0	Ensemble de ridoir (6) : DBXL-E 2.0	Set tenditore (6): DBXL-E 2.0
LOS251097	BellcrankSet&TopPlate:DBXL-E 2.	Umlenkhebelsatz & Oberplatte: DBXL-E 2.	Ensemble de levier coudé et plaque supérieure : DBXL-E 2.	Set squadretta e piastra superiore: DBXL-E 2.
LOS251098	Battery Tray (2): DBXL-E 2.0	Akkufach (2): DBXL-E 2.0	Support de batterie (2) : DBXL-E 2.0	Porta batteria (2): DBXL-E 2.0
LOS251099	Mounting Plate, ESC: DBXL-E 2.0	Halterungsplatte, Geschwindigkeitsregler: DBXL-E 2.0	Plaque de montage, variateur ESC : DBXL-E 2.0	Piastra di montaggio, ESC: DBXL-E 2.0
LOS251100	ChassisBraceSet: DBXL-E 2.0	Karosseriestrebensatz: DBXL-E 2.0	Ensemble de support de châssis : DBXL-E 2.0	Set montanti telaio: DBXL-E 2.0
LOS251101	Radio Tray Set: DBXL-E 2.0	Funkhalterungsplatte: DBXL-E 2.0	Ensemble de plateau du système radio : DBXL-E 2.0	Set supporto radio: DBXL-E 2.0
LOS251102	Fr/Rr Bulkhead Set: DBXL-E 2.0	Spritzwandsatz, vorne/hinten: DBXL-E 2.0	Ensemble de cloisons avant/arrière : DBXL-E 2.0	Set paratia ant./post.: DBXL-E 2.0
LOS251103	ChassisSideGuardSet: DBXL-E 2.0	Karosserieseitenschutz-Satz: DBXL-E 2.0	Ensemble de protections latérales du châssis : DBXL-E 2.0	Set protezioni laterali telaio: DBXL-E 2.0
LOS252009	Diff Rebuild Kit: 1:5 4wd DB XL	Differentialgetriebe-Umbau-Kit: 1:5 4wd DB XL	Kit de reconstruction de différentiel : 1:5 4rm DB XL	Kit riparazione differenziale: 1:5 4WD DB XL
LOS252010	Fr/Rr Diff Case (2):1:5 4wd DB	Differentialgehäuse, vorne/hinten (2): 1:5 4wd DB	Boîtier de différentiels avant/arrière (2) : 1:5 4rm DB	Scatola differenziale ant./post. (2): 1:5 4WD DB
LOS252050	Wheel Hex Black&Pin(4):MTXL,DBXL-E	Rad-Sechskant, schwarz & Stift (4): MTXL,DBXL-E	Hexagone de roue noir et goupille (4) : MTXL,DBXL-E	Esagono ruota nero e perno (4): MTXL, DBXL-E
LOS252051	Wheel Nut, Black (4): MTXL, DBXL-E	Radmutter, schwarz (4): MTXL, DBXL-E	Écrou de roue, Noir (4) : MTXL, DBXL-E	Dado ruota, nero (4): MTXL, DBXL-E
LOS252058	Motor Mnt w/Adapter,Blk:DBXL-E	Motorhalterung mit Adapter,schwarz: DBXL-E	Support moteur avec adaptateur, noir : DBXL-E	Supporto motore con adattatore, nero: DBXL-E
LOS252059	DiffStndOff,Toplate,GrCvr:DBXL-E	Diff. Abstandsbolzen, Oberplatte, Getriebeabdeckung: DBXL-E	DiffStndOff,Toplate,GrCvr : DBXL-E	Distanziale diff. centrale, piastra sup. e copertura ingr.: DBXL-E
LOS252064	Pinion Gear, 13T,1.5M, 8mm Shaf	Zahnradgetriebe, 13T, 1,5M, 8 mm Welle	Engrenage à pignons, arbre de 13 T, 1,5 M, 8 mm	Pignone, 13T, 1,5 m, albero 8 mm
LOS252066	Diff Housing Set, Al (1): DBXL-E	Differentialgehäuse-Satz. Al. (1): DBXL-E	Ensemble de boîtier de différentiel, Al (1) : DBXL-E	Set scatola differenziale, alluminio (1): DBXL-E
LOS252067	Diff Rebuild Kit,Al Diff:DBXL-E	Differentialgetriebe-Umbau-Satz, Al. Diff.: DBXL-E	Kit de reconstruction de différentiel, Al Diff : DBXL-E	Kit riparazione differenziale, differenziale in alluminio: DBXL-E
LOS252113	Dogbone,Rr,5mmPin(2):DBXL-E 2.0	Dogbone, hinten, 5 mm Stift (2): DBXL-E 2.0	Dogbone, Ar, goupille 5 mm (2) : DBXL-E 2.0	Cardano, posteriore, perno 5 mm (2): DBXL-E 2.0
LOS252114	Dogbone, CtrFr,5mmPin:DBXL-E 2.0	Dogbone, Mitte, vorne, 5 mm Stift: DBXL-E 2.0	Dogbone, Ctr Av, goupille 5 mm : DBXL-E 2.0	Cardano, centrale anteriore, perno 5 mm (2): DBXL-E 2.0
LOS252115	Dogbone,Ctr Rr,5mmPin:DBXL-E 2.0	Dogbone, Mitte/hinten, 5 mm Stift: DBXL-E 2.0	Dogbone, Ctr Ar, goupille 5 mm : DBXL-E 2.0	Cardano, centrale posteriore, perno 5 mm (2): DBXL-E 2.0
LOS252116	RrStubAxle,5mmPin(2):DBXL-E 2.0	Achswellenstumpf, hinten, 5 mm Stift (2): DBXL-E 2.0	Demi-essieu arrière, goupille 5 mm (2) : DBXL-E 2.0	Fuso a snodo posteriore, perno 5 mm (2): DBXL-E 2.0
LOS252117	Fr/Rr Outdrive,5mm(2):DBXL-E 2.0	Antrieb, vorne/hinten, 5 mm Stift (2): DBXL-E 2.0	Entraînement extérieur avant/arrière, 5 mm (2) : DBXL-E 2.0	Trascinatore ant./post., 5 mm (2): DBXL-E 2.0
LOS252118	CtrDiffOtdrve,5mm(2): DBXL-E 2.0	Differentialantrieb, Mitte, 5 mm (2): DBXL-E 2.0	Entraînement extérieur diff ctr, 5 mm (2) : DBXL-E 2.0	Trascinatore differenziale centrale, 5 mm (2): DBXL-E 2.0
LOS252119	Fr CVD Assy, 5mm Pin: DBXL-E 2.0	CV-Antriebsgruppe, vorne, 5 mm Stift: DBXL-E 2.0	Ensemble CVD avant, goupille 5 mm : DBXL-E 2.0	Gruppo CVD anteriore, perno 5 mm: DBXL-E 2.0
LOS252120	AxlBtSet,5mmPins(10):DBXL-E 2.0	Achse unten, Satz, 5 mm Stifte (10): DBXL-E 2.0	AxlBtSe, goupilles 5 mm (10) : DBXL-E 2.0	Set protezione asse, perni 5 mm (10): DBXL-E 2.0
LOS252121	OutDrveCup,Ctr,5mm(2):DBXL-E 2.0	Antrieb, Lager, zentral, 5 mm (2): DBXL-E 2.0	Coupelle d'arbre extérieur, Ctr, 5mm(2) : DBXL-E 2.0	Coppa trascinatore, centrale, 5 mm (2): DBXL-E 2.0
LOS252122	Front/Rear Gear Box: DBXL-E 2.0	Vordere/hintere Getriebebox: DBXL-E 2.0	Boîte à engrenage avant/arrière : DBXL-E 2.0	Scatola ingranaggi ant./post.: DBXL-E 2.0
LOS252123	Fr/RrDiffRingGear,40T:DBXL-E 2.0	Differential-Hohlrad, vorne/hinten, 40T: DBXL-E 2.0.	Engrenage à anneau diff avant/arrière, 40T : DBXL-E 2.0	Corona dentata differenziale ant./post., 40T: DBXL-E 2.0
LOS252124	Fr/RrDiffPinion,12T: DBXL-E 2.0	Differential-Getrieberad, vorne/hinten, 12T: DBXL-E 2.0	Pignon diff avant/arrière, 12T : DBXL-E 2.0	Pignone differenziale ant./post., 12T: DBXL-E 2.0
LOS252127	Diff Shims - 24x21x0.3mm (10)	Differentialdichtscheiben - 24 x 21 x 0,3 mm (10)	Cales de différentiel - 24x21x0,3 mm (10)	Spessori differenziale - 24 x 21 x 0,3 mm (10)
LOS253010	Shock Springs (4): 1:5 4WD DBXL	Stoßdämpferfedern (4): 1:5 4WD DBXL	Ressorts d'amortisseur (4) : 1:5 4RM DBXL	Molle ammortizzatori (4): 1:5 4WD DBXL
LOS253026	ShckBdySt,Slv,FOX(2):DBXL-E 2.0	Stoßdämpfergehäusesatz, silber, FOX (2): DBXL-E 2.0	Ensemble de carrosserie d'amortisseur, argenté, FOX(2) : DBXL-E 2.0	Corpo ammortizzatore, manicotto, FOX (2): DBXL-E 2.0
LOS253027	Shock Boot Set (4): DBXL-E 2.0	Stoßdämpfermanschettensatz (4): DBXL-E 2.0	Ensemble de soufflet d'amortisseur (4) : DBXL-E 2.0	Set protezione ammortizzatore (4): DBXL-E 2.0
LOS253029	Shock Standoff and Hardware (4)	Stoßdämpfer-Standoff und Hardware (4)	Entretoise d'amortisseur et quincaillerie (4)	Distanziale ammortizzatore e viteria (4)
LOS254005	SpndlCarriers/Spndl/Hubs:1:5 4w	Spindel und Träger/Spindel/Naben: 1:5 4w	Supports d'axes/axes/moyeux : 1:5 4rm	Portafuselli/fuselli/mozzi: 1:5 4w
LOS254006	SuspensionArm Set(4):1:5 4wd DB	Aufhängungsarmsatz (4): 1:5 4wd DB	Ensemble de bras de suspension (4) : 1:5 4rm DB	Set braccetti sospensione (4): 1:5 4WD DB
LOS254009	HingePinBrIns Set:1:5 4wd DB XL	Scharnierstiftklammer, Satz: 1:5 4wd DB XL	Ensemble de goupilles de charnière (4) : 1:5 4rm DB XL	Set inserti piastrine: 1:5 4WD DB XL
LOS254010	Hinge Pin, Set: 1:5 4wd DB XL	Scharnierbolzen, Satz: 1:5 4wd DB XL	Ensemble de goupilles de charnière : 1:5 4rm DB XL	Set perno braccetti: 1:5 4WD DB XL
LOS254031	PivotBalls & Rod Ends (12): MTXL	Schwenkkugeln & Stangenköpfe (12): MTXL	Rotules et embouts de bielle (12) : MTXL	Teste a snodo e articolazioni a sfera (12): MTXL
LOS254063	Shock Tower,Fr,BLK,AL:DBXL-E 2.0	Dämpferbrücke, vorne, schwarz, Al.: DBXL-E 2.0	Tour d'amortisseur, avant, noir, AL : DBXL-E 2.0	Set torre ammortizzatore, nero, alluminio, anteriore: DBXL-E 2.0
LOS254064	Shock Tower,Rr,BLK,AL:DBXL-E 2.0	Dämpferbrücke, hinten, schwarz, Al.: DBXL-E 2.0	Tour d'amortisseur, arrière, noir, AL : DBXL-E 2.0	Set torre ammortizzatore, nero, alluminio, posteriore: DBXL-E 2.0
LOS254065	Fr/Rr Sway Bar Set: DBXL-E 2.0	Schwingen-Set, vorne/hinten: DBXL-E 2.0	Ensemble de barre stabilisatrice avant/arrière : DBXL-E 2.0	Set barra antirollio ant./post.: DBXL-E 2.0

REPLACEMENT PARTS // TEILELISTE // LISTE DES PIÈCES DE RECHANGE // ELENCO DEI RICAMBI

Part #	English	Deutsch	Français	Italiano
LOS255000	Set Screw, Set,(20):1:5 4wd DB XL	Schraubensatz (20): 1:5 4wd DB XL	Vis de fixation, ensemble (20) : 1:5 4rm DB XL	Set viti (20): 1:5 4WD DB XL
LOS255001	Cap HeadScrew,St (30):1:5 4wd DB	Inbusschraubensatz (30): 1:5 4wd DB	Vis d'assemblage creuses, ensemble (30) : 1:5 4rm DB	Set di viti a testa cilindrica (30): 1:5 4WD DB
LOS255002	ButtonHeadScrew,St(4):1:5 4wd D XL	Rundkopfschraubensatz (4): 1:5 4wd D XL	Vis à tête bombée, ensemble (4) : 1:5 4rm D XL	Set di viti a testa tonda (4): 1:5 4WD D XL
LOS255003	FlatHead Screw,St(30):1:5 4wd D XL	Flachkopfschraubensatz (30): 1:5 4wd D XL	Vis à tête plate, ensemble (30) : 1:5 4rm D XL	Set di viti a testa piana (30): 1:5 4WD D XL
LOS255005	Screw,3x10mm(10):1:5 4wd DB XL	Schraube, 3 x 10 mm (10): 1:5 4wd DB XL	Vis, 3x10 mm (10) : 1:5 4rm DB XL	Viti, 3x10 mm (10): 1:5 4WD DB XL
LOS256000	LocknutSet,(15): 1:5 4wd DB XL	Kontermuttern-Satz (15): 1:5 4wd DB XL	Ensemble de contre-écrous, (15) : 1:5 4rm DB XL	Set controdadi (15): 1:5 4WD DB XL
LOS256001	Washer/Shim,Set(20):1:5 4wd DB XL	Satz aus Unterlegscheibe/Dichtscheibe (20): 1:5 4wd DB XL	Rondelle/cale, ensemble (20) : 1:5 4rm DB XL	Set rondelle/distanziali (20): 1:5 4WD DB XL
LOS256003	Bushing,Steel,Set(11):1:5 4wd D XL	Buchse, Stahl, Satz (11): 1:5 4wd D XL	Bague, acier, ensemble (11) : 1:5 4rm D XL	Set boccole, acciaio (11): 1:5 4WD D XL
LOS256004	Ball,Shock/Link (10):1:5 4wd DB XL	Kugel, Stoßdämpfer/Stange (10): 1:5 4wd DB XL	Bille, amortisseur/tringlerie (10) : 1:5 4rm DB XL	Uniball, ammortizzatore/attacco (10): 1:5 4WD DB XL
LOS257001	Bearing,10x22x6mm,(4):1:5 4wd D X	Lager,10 x 22 x 6 mm,(4): 1:5 4wd D X	Palier, 10x22x6 mm (4) : 1:5 4rm D X	Cuscinetto, 10x22x6 mm,(4): 1:5 4WD D X
LOS257002	Bushing,10x7x4mm,(4):1:5 4wd DB XL	Buchse, 10 x 7 x 4 mm,(4): 1:5 4wd DB XL	Bague,10x7x4 mm (4) : 1:5 4rm DB XL	Cuscinetto, 10x7x4 mm,(4): 1:5 4WD DB XL
LOS352002	Cntr Diff Spur Gear, 50T: DBXL-E	Mitteldifferential Stirnrad, 50T: DBXL-E	Engrenage cylindrique différentiel central, 50T : DBXL-E	Ingranaggio cilindrico differenziale centrale, 50T: DBXL-E
LOS45017	Tire, Creepy Crawler (2): DBXL-E	Reifen, Creepy Crawler (2): DBXL-E	Pneu, Creepy Crawler (2) : DBXL-E	Pneumatico Creepy Crawler (2): DBXL-E
LOS45018	Tire Insert, Molded (2): DBXL-E	Reifeneinsatz, geformt (2): DBXL-E	Insertion de pneu, moulée (2) : DBXL-E	Inserto pneumatico, stampato (2): DBXL-E
LOS45032	Whl,Slvr,OrgBdLck(2):DBXL-E 2.0	Reifen, silber, orange, Beadlock (2): DBXL-E 2.0	Roue, argentée, orange, BdLck(2) : DBXL-E 2.0	Ruota, argento, cerchio arancione (2): DBXL-E 2.0
LOS45033	Whl,Slvr,RedBdLck(2):DBXL-E 2.0	Reifen, silber, rot, Beadlock (2): DBXL-E 2.0	Roue, argentée, roue, BdLck(2) : DBXL-E 2.0	Ruota, argento, cerchio rosso (2): DBXL-E 2.0
LOSB5972	Outer Axle Bearngs 12x24x6mm(2)	Außenachsenlager 12 x 24 x 6 mm (2)	Paliers d'essieu extérieur 12x24x6 mm(2)	Cuscinetti asse esterno, 12x24x6 mm(2)
SPM2335	DX2E ACTIVE 2ChDSMR Radiow/SR310	DX2E ACTIVE 2ChDSMR Funk mit SR310	Radio DX2E ACTIVE 2 canaux DSMR avec SR310	Radio DX2E ACTIVE 2 canali DSMR con SR310
SPM6741	Optional Bluetooth Module DX2E	Optional Bluetooth-Modul DX2E	Module Bluetooth facultatif DX2E	Modulo Bluetooth opzionale DX2E
SPMS906	Spektrum S906 1/5th Scale Servo	Spektrum S906 1/5 Maßstab Servo	Servo à l'échelle 1/5 Spektrum S906	Servocomando Spektrum S906 1:5
SPMSR6100AT	SR6100AT 6 Ch AVC/Tele Surf RX	SR6100ATAVC Telemetrie Oberflächenempfänger mit 6 Kanälen	Tele Surf RX/AVC 6 canaux SR6100AT	RX di superficie SR6100AT 6 Ch AVC/ Telemetria
SPMXSE1160	Firma 160Amp Brushless Smart ES	Firma 160 A Bürstenloser Smart-Geschwindigkeitsregler	Variateur ESC sans balais 160 A Smart Firma	Smart ESC Firma 160 A Brushless
SPMXSM1100	Firma 780Kv Brushless Motor	Firma 780 kV Bürstenloser Motor	Moteur sans balais 780 Kv Firma	Motore Brushless Firma 780 Kv
TLR5914	Button Head Screws,M2 x 12mm(10)	Rundkopfschrauben, M2 x 12 mm (10)	Vis à tête bombée, M2 x 12 mm (10)	Viti a testa tonda, M2 x 12 mm (10)
TLR5932	Cap Head Screws, M3 x 10mm (10)	Inbusschrauben, M3 x 10 mm (10)	Vis d'assemblage creuses, M3 x 10mm (10)	Viti a testa cilindrica, M3 x 10 mm (10)
TLR5933	Cap Head Screws, M3 x 12mm (10)	Inbusschrauben, M3 x 12mm (10)	Vis d'assemblage creuses, M3 x 12mm (10)	Viti a testa cilindrica, M3 x 12 mm (10)
TLR5963	Flathead Screw, M3 x 12mm (10)	Flachkopfschraube, M3 x 12mm (10)	Vis à tête plate, M3 x 12mm (10)	Viti a testa piana, M3 x 12 mm (10)
TLR5964	Flathead Screw, M3 x 16mm (10)	Flachkopfschraube, M3 x 16mm (10)	Vis à tête plate, M3 x 16mm (10)	Viti a testa piana, M3 x 16 mm (10)
TLR5965	Flathead Screw, M3 x 20mm (10)	Flachkopfschraube, M3 x 20mm (10)	Vis à tête plate, M3 x 20mm (10)	Viti a testa piana, M3 x 20 mm (10)
TLR6313	Locknut, M3 x .5 x 5.5mm (10)	Kontermutter, M3 x 0,5 x 5,5 mm (10)	Contre-écrou M3 x 5 x 5,5 mm (10)	Controdadi, M3 x 5 x 5,5 mm (10)
TLR6352	Washers, M3 (10)	Unterlegscheiben, M3 (10)	Rondelles, M3 (10)	Rondelle, M3 (10)
TLR74008	Silicone Shock Oil, 35 Wt, 2 Oz	Stoßdämpfer-Silikonöl, 35 wt, 59 ml (2 oz)	Huile silicone pour amortisseurs, 35 WT, 2 oz	Olio di silicone amm., 35 wt, 60 ml (2 oz)
TLR8202	Body Clips, Black (12)	Gehäuseklemmen, schwarz (12)	Clips de carrosserie, noir (12)	Clip carrozzeria, colore nero (12)

RECOMMENDED PARTS // EMPFOHLENE TEILE // PIÈCES RECOMMANDÉES // PEZZI RACCOMANDATI

Part #	English	Deutsch	Français	Italiano
SPMXC1010	Spektrum S2100 SMART Charger*	Spektrum S2100 SMART-Ladegerät*	Chargeur Spektrum S2100 SMART*	Caricabatterie Spektrum S2100 SMART*
SPMX50003S50H5	5000mAh 3S 11.1V50CSmartLiPo IC5	5000 mAh 3S 11,1 V 50C Smart LiPo IC5	IC5 LiPo Smart 50C 11,1 V 3S 5000 mAh	5000 mAh 3S 11,1 V 50C Smart LiPo IC5
SPMX50004S50H5	5000mAh 4S 14.8V50CSmartLiPo IC5	5000 mAh 4S 14,8 V 50C Smart LiPo IC5	IC5 LiPo Smart 50C 14,8 V 4S 5000 mAh	5000 mAh 4S 14,8 V 50C Smart LiPo IC5
SPMX50003S100H5	5000mAh 3S 11.1V100CSmartLiPo IC5	5000 mAh 3S 11,1 V 100C Smart LiPo IC5	IC5 LiPo Smart 100C 11,1 V 3S 5000 mAh	5000 mAh 3S 11,1 V 100C Smart LiPo IC5
SPMX50004S100H5	5000mAh 4S 14.8V100CSmartLiPo IC5	5000 mAh 4S 14,8 V 100C Smart LiPo IC5	IC5 LiPo Smart 100C 14,8 V 4S 5000 mAh	5000 mAh 4S 14,8 V 100C Smart LiPo IC5
SPMXCA507	IC3 Batt to IC5 Device 4"	IC3-Akku an IC5-Gerät 4"	Batterie IC3 vers dispositif IC5 100 mm (4 po)	Batteria IC3 a dispositivo IC5 4"

*SPMXCA507 required to charge batteries with IC5 connectors on the S2100 Charger
*Beim SPMXCA507 sind die Akkus mit IC5-Steckern am S2100-Ladegerät zu laden.
*SPMXCA507 requis pour charger les batteries avec connecteurs IC5 sur le chargeur S2100
*SPMXCA507 necessario per caricare batterie con connettori IC5 sul caricabatterie S2100

OPTIONAL PARTS // OPTIONALE TEILE // PIÈCES OPTIONNELLES // PARTI OPZIONALI

Part #	English	Deutsch	Français	Italiano
LOS250018	Body Set W/Sticker Sheet, Clear: DBXL-E	Karosseriesatz mit Stickerbogen, transparent DBXL-E	Ensemble carrosserie avec feuille d'autocollants, transparent : DBXL-E	Carrozzeria con adesivi, trasparente: DBXL-E
LOS252038	Pinion Gear, 15T, 1.5M, 8mm Shaft	Zahnradgetriebe, 15T, 1,5M, 8 mm Welle	Engrenage à pignons, arbre de 15T, 1,5 M, 8 mm	Pignone, 15T, 1,5 m, albero 8 mm
LOS252039	Pinion Gear, 16T, 1.5M, 8mm Shaft	Zahnradgetriebe, 16T, 1,5M, 8 mm Welle	Engrenage à pignons, arbre de 16T, 1,5 M, 8 mm	Pignone, 16T, 1,5 m, albero 8 mm
LOS252040	Pinion Gear, 17T, 1.5M, 8mm Shaft	Zahnradgetriebe, 17T, 1,5M, 8 mm Welle	Engrenage à pignons, arbre de 17T, 1,5 M, 8 mm	Pignone, 17T, 1,5 m, albero 8 mm
LOS252041	Pinion Gear, 18T, 1.5M, 8mm Shaft	Zahnradgetriebe, 18T, 1,5M, 8 mm Welle	Engrenage à pignons, arbre de 18T, 1,5 M, 8 mm	Pignone, 18T, 1,5 m, albero 8 mm
LOS252061	Center Diff Spur Gear, 48T	Mitteldifferential Stirnrad, 48T	Engrenage cylindrique différentiel central, 48T	Ingranaggio cilindrico differenziale centrale, 48T
LOS252062	Pinion Gear, 11T, 1.5M, 8mm Shaft	Zahnradgetriebe, 11T, 1,5M, 8 mm Welle	Engrenage à pignons, arbre de 11T, 1,5 M, 8 mm	Pignone, 11T, 1,5 m, albero 8 mm
LOS252063	Pinion Gear, 12T, 1.5M, 8mm Shaft	Zahnradgetriebe, 12T, 1,5M, 8 mm Welle	Engrenage à pignons, arbre de 12T, 1,5 M, 8 mm	Pignone, 12T, 1,5 m, albero 8 mm
LOS252065	Pinion Gear, 14T, 1.5mm, 8mm Shaft	Zahnradgetriebe, 14T, 1,5M, 8 mm Welle	Engrenage à pignons, arbre de 14T, 1,5 mm, 8 mm	Pignone, 14T, 1,5 m, albero 8 mm
LOS254032	Front Spindle Set, Black Aluminum	Front-Spindelsatz, schwarz, Aluminium	Ensemble d'axe avant, aluminium noir	Set fusello anteriore, alluminio, nero
LOS351014	Dual Steering Servo Links, Adjustable for use with single or dual servos	Spurstangen mit dualer Steuerung, anpassbar für Verwendung mit Einzelservo (Single) oder Doppelservo (Dual)	Bras de servo à double direction, réglables pour être utilisés avec des servos simples ou doubles	Servocontrollo sterzo doppio, regolabile per uso con servo singolo o doppio
LOS352003	Mechanical Brake Set	Mechanische Bremse, Satz	Ensemble de frein mécanique	Set freno meccanico
LOS354001	Front Spindle Set, Aluminum: DBXL	Front-Spindelsatz, Aluminium: DBXL	Ensemble d'axe avant, aluminium : DBXL	Set fusello anteriore, alluminio: DBXL
LOS354002	Front Spindle Carrier Set, Aluminum: DBXL	Front-Spindelträgersatz, Aluminium: DBXL	Ensemble de support d'axe avant, aluminium : DBXL	Set portafusello anteriore, alluminio: DBXL
LOS354003	Rear Hub Set, Aluminum: DBXL	Nabensatz, hinten, Aluminium: DBXL	Ensemble de moyeu arrière, aluminium : DBXL	Supporto mozzo posteriore, alluminio: DBXL
LOSA99172	Camber Guage	Sturzlehre	Jauge de cambrure	Strumento regolazione camber
SPM5110	DX5C 5-channel Surface System with SRS6000	DX5C 5-Kanal-Oberflächensystem mit SRS6000	Système de surface 5 canaux DX5C avec SRS6000	Sistema di superficie DX5C a 5 canali con SRS6000
SPM5200	DX5 Rugged 5-Channel Surface System	DX5 Rugged 5-Kanal-Oberflächensystem	Système de surface 5 canaux DX5 Rugged	Sistema di superficie DX5 Rugged a 5 canali
SPMR5010	DX5 Pro 5-channel DSMR TX only	DX5 Pro 5-Kanal DSMR nur TX	DX5 Pro 5 canaux DSMR TX uniquement	DX5 Pro 5 canali DSMR solo TX
SPMR6410	DX6R 6-Channel Smart Radio TX Only	DX6R 6-Kanal-Smart-Funk nur TX	DX6R 6 canaux radio intelligente TX uniquement	DX6R 6 canali Smart Radio solo TX
SPMSS9010	S9010 HV 1/5 scale wp servo	S9010 HV 1/5 Maßstab WP Servo	Servo WP échelle 1/5 S9010 HV	Servo impermeabile S9010 HV scala 1:5
SPMSS9020	S9020 HV 1/5 scale WP Servo	S9020 HV 1/5 Maßstab WP Servo	Servo WP échelle 1/5 S9020 HV	Servo impermeabile S9020 HV scala 1:5
TLR76000	Tire Glue, Standard	Reifenklebemittel, Standard	Colle de pneu, standard	Colla pneumatici, standard
TLR76004	TLR Lok, Threadlock, Blue	TLR Lok, Schraubensicherung, blau	Verrou TLR, frein-filet, bleu	TLR Lok, frenafiletti, blu
LOS351015	Chassis Brace Set, Rear, Aluminum, Black: DBXL-E 2.0	Karosseriestrebensatz, hinten, Aluminium, schwarz: DBXL-E 2.0	Ensemble de support de châssis, arrière, aluminium, noir : DBXL-E 2.0	Set montanti telaio, posteriore, alluminio, nero: DBXL-E 2.0
LOS351016	Chassis Brace, Front, Aluminum, Black: DBXL-E 2.0	Karosseriestrebe, vorne, Aluminium, schwarz: DBXL-E 2.0	Support de châssis, avant, aluminium, noir : DBXL-E 2.0	Set montanti telaio, anteriore, alluminio, nero: DBXL-E 2.0
LOS351017	Servo Saver Top, Aluminum, Black: DBXL-E 2.0	Servo-Saver-Oberseite, Aluminium, schwarz: DBXL-E 2.0	Sauve-servo supérieur, aluminium, noir : DBXL-E 2.0	Salvaservo inferiore, alluminio, nero: DBXL-E 2.0
LOS352009	Wheel Nut, Captured, Black (4): DBXL-E 2.0	Radmuttern, verbleibend, schwarz (4): DBXL-E 2.0	Écrou de roue, Capturé, Noir (4) : DBXL-E 2.0	Dado ruota, prigioniero, nero (4): DBXL-E 2.0
LOS351018	Front Top Plate, Aluminum, Black: DBXL-E 2.0	Oberplatte, vorne, Aluminium, schwarz: DBXL-E 2.0	Plaque supérieure avant, aluminium, noir : DBXL-E 2.0	Piastra superiore anteriore, alluminio, nero: DBXL-E 2.0
LOS45034	Scoops Paddle Tire, Rear (2): DBXL-E 2.0	Schaufeln Schaufelrad, hinten (2): DBXL-E 2.0	Pneu paddle Scoops, arrière (2) : DBXL-E 2.0	Ruota Scoops Paddle, posteriori (2): DBXL-E 2.0
LOS45035	Slicers Rib Tire, Front (2): DBXL-E 2.0	Slicers Rippenreifen, vorne (2): DBXL-E 2.0	Pneu à rainures Slicers, avant (2) : DBXL-E 2.0	Ruota Slicers Rib, anteriore (2): DBXL-E 2.0

EXPLODED VIEW // EXPLOSIONSZEICHNUNG // VUE ÉCLATÉE DES PIÈCES // VISTA ESPLOSA DELLE PARTI

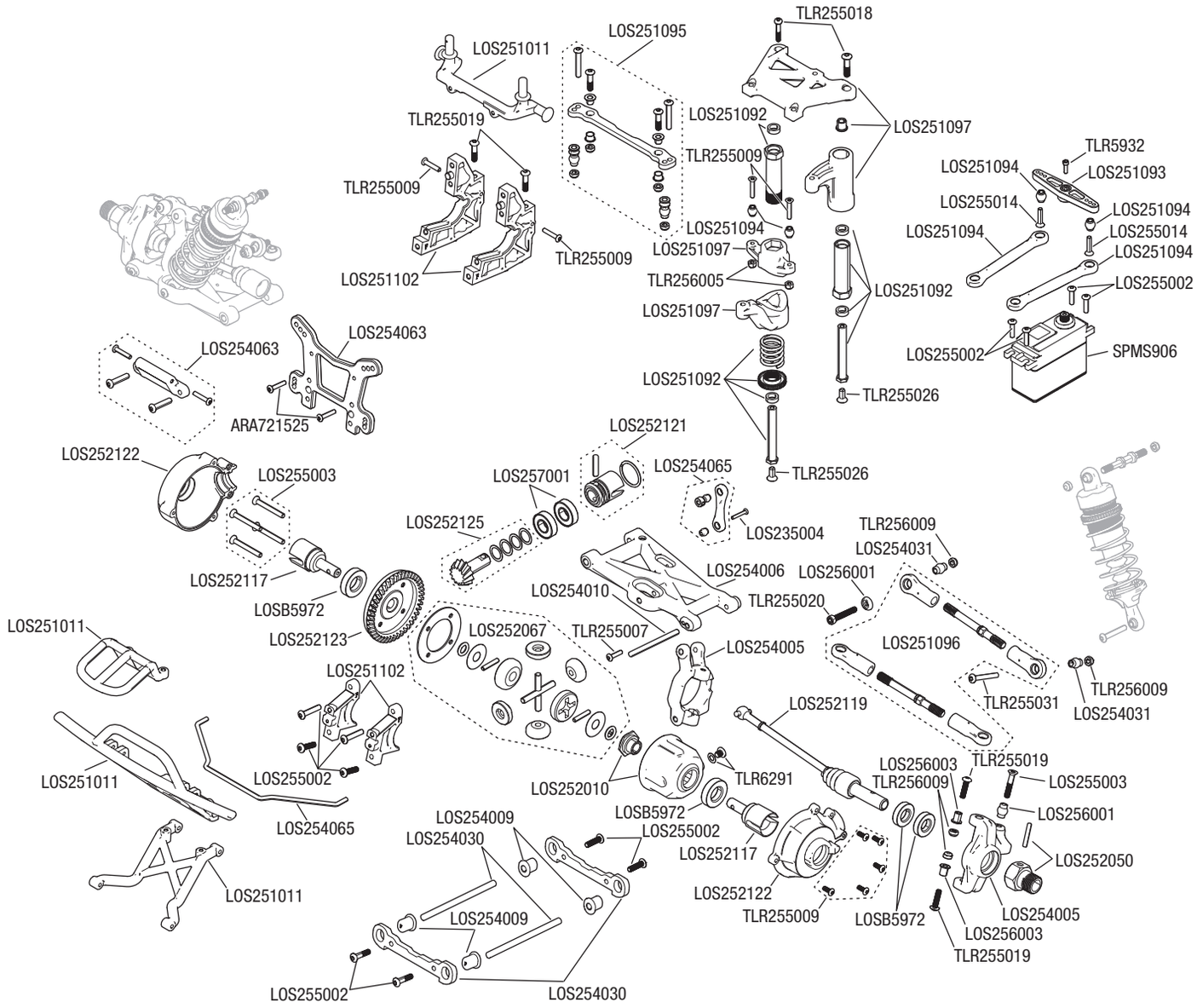

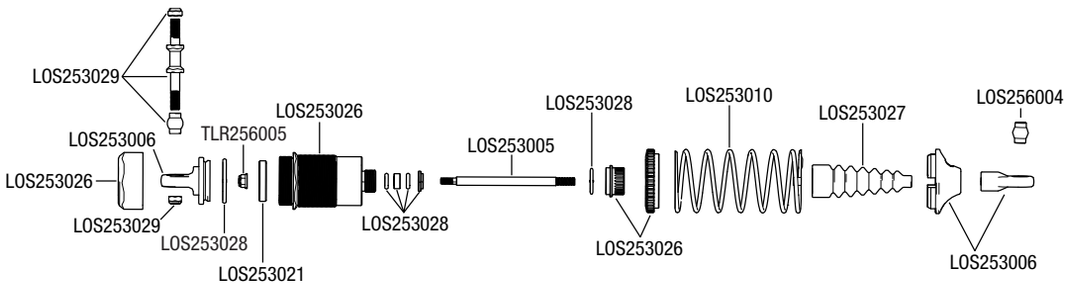

EXPLODED VIEW // EXPLOSIONSZEICHNUNG // VUE ÉCLATÉE DES PIÈCES // VISTA ESPLOSA DELLE PARTI

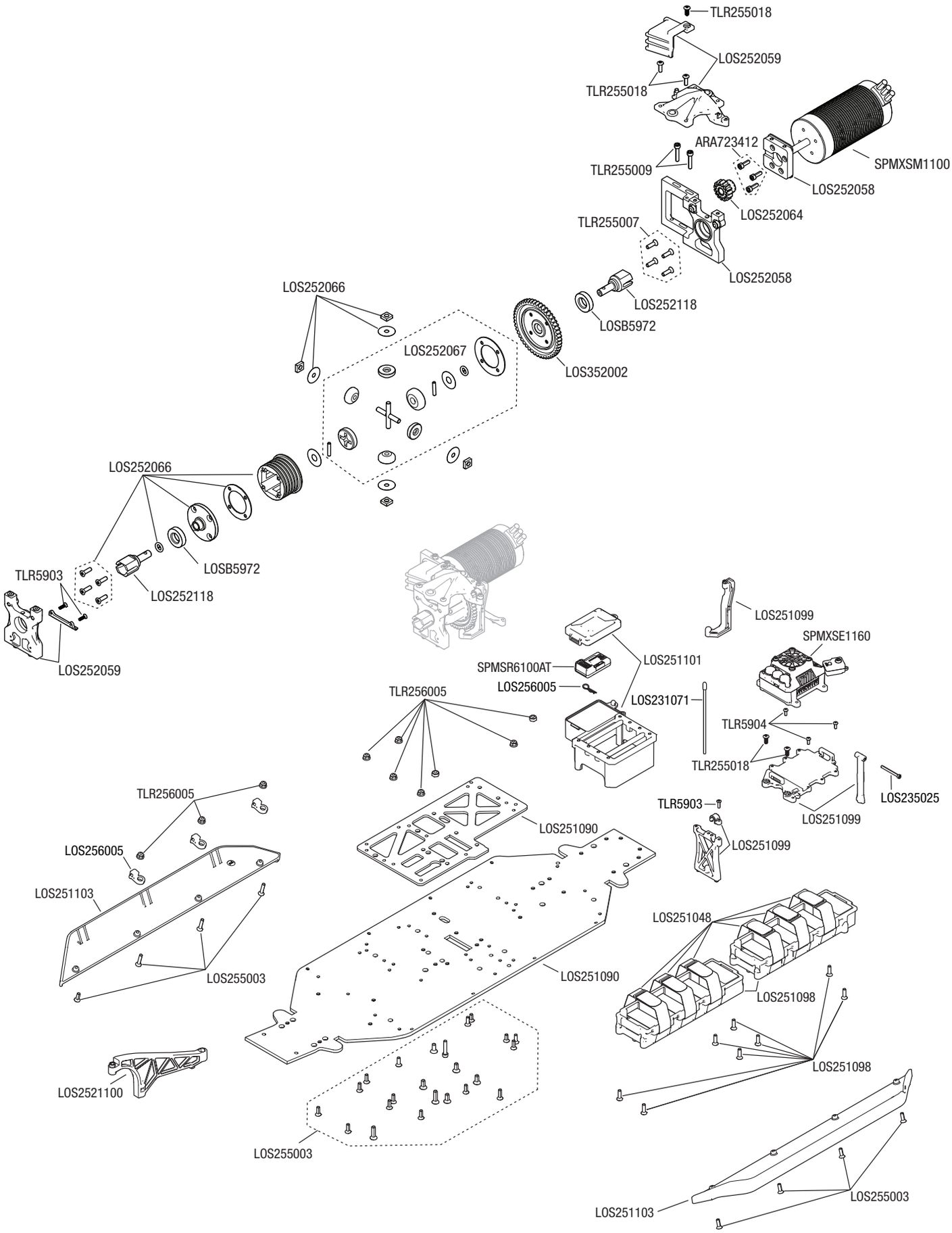

EXPLODED VIEW // EXPLOSIONSZEICHNUNG // VUE ÉCLATÉE DES PIÈCES // VISTA ESPLOSA DELLE PARTI

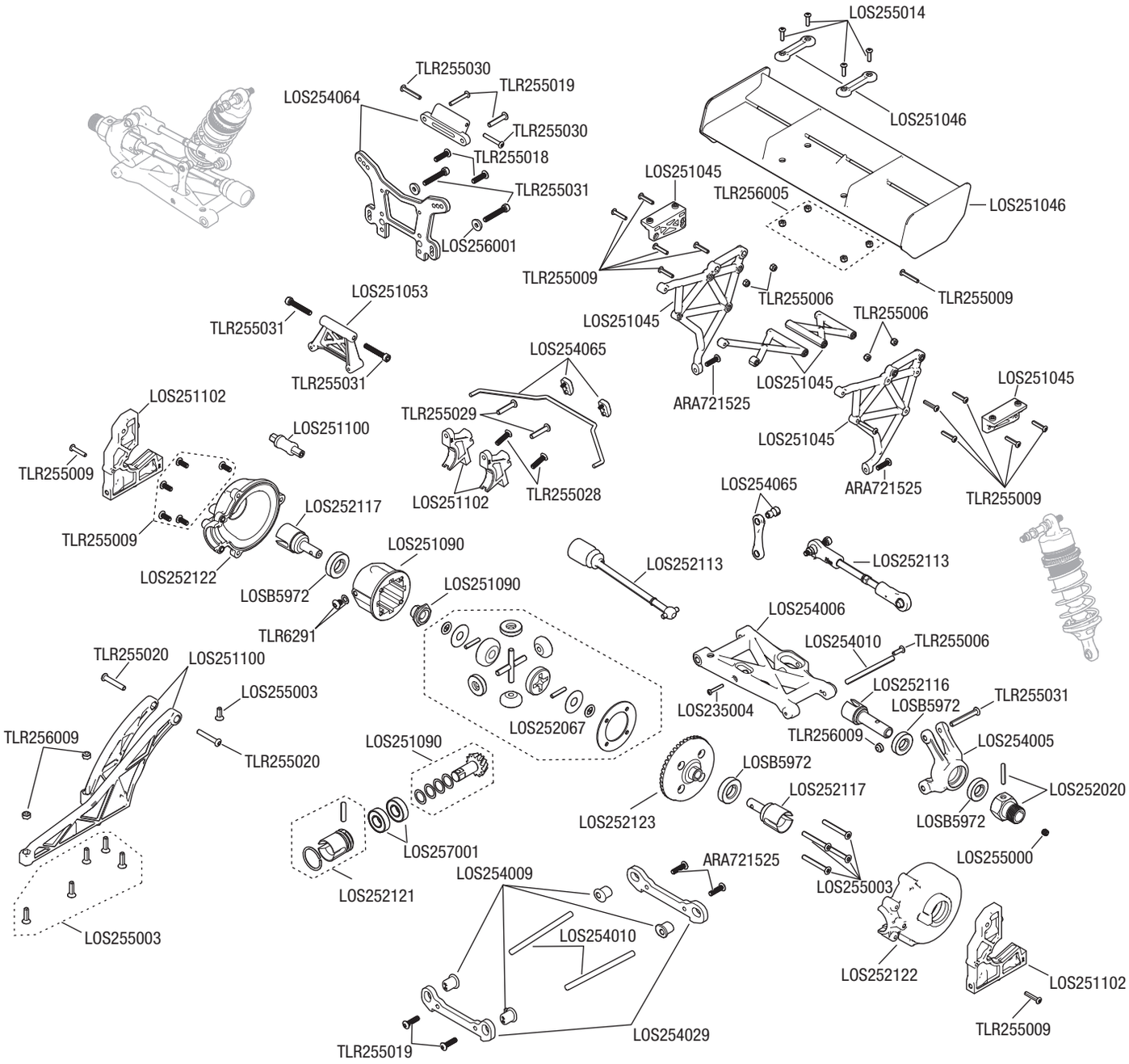

EXPLODED VIEW // EXPLOSIONSZEICHNUNG // VUE ÉCLATÉE DES PIÈCES // VISTA ESPLOSA DELLE PARTI

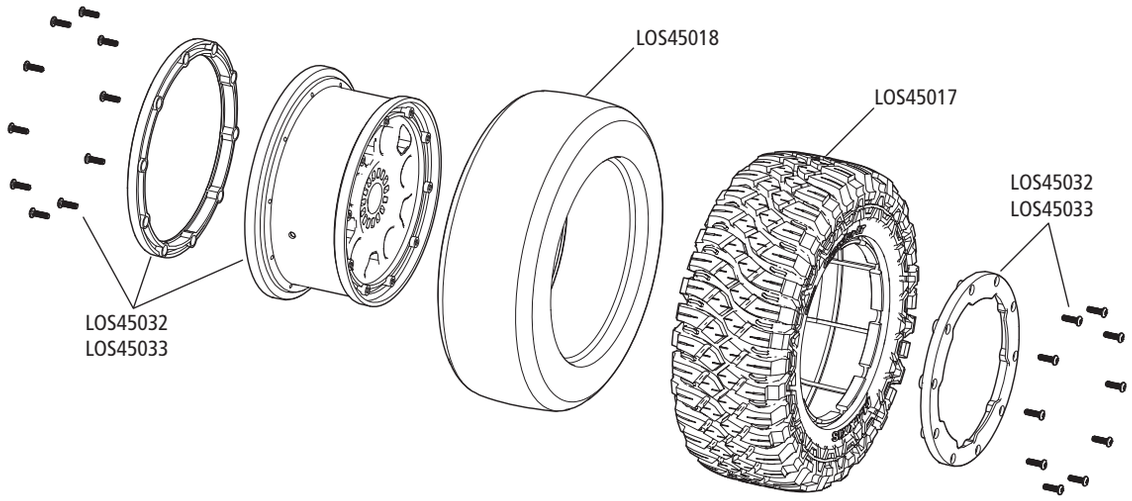

LOS250043 (Body Set, Clear // Gehäuse-Set, transparent // Ensemble de carrosserie, transparent // Carrozzeria, trasparente)
LOS250044 (Body Set, FOX // Gehäuse-Set, FOX // Ensemble de carrosserie, FOX // Carrozzeria, FOX)
LOS250018 (Body Set, LOSI // Gehäuse-Set, LOSI // Ensemble de carrosserie, LOSI // Carrozzeria, LOSI)

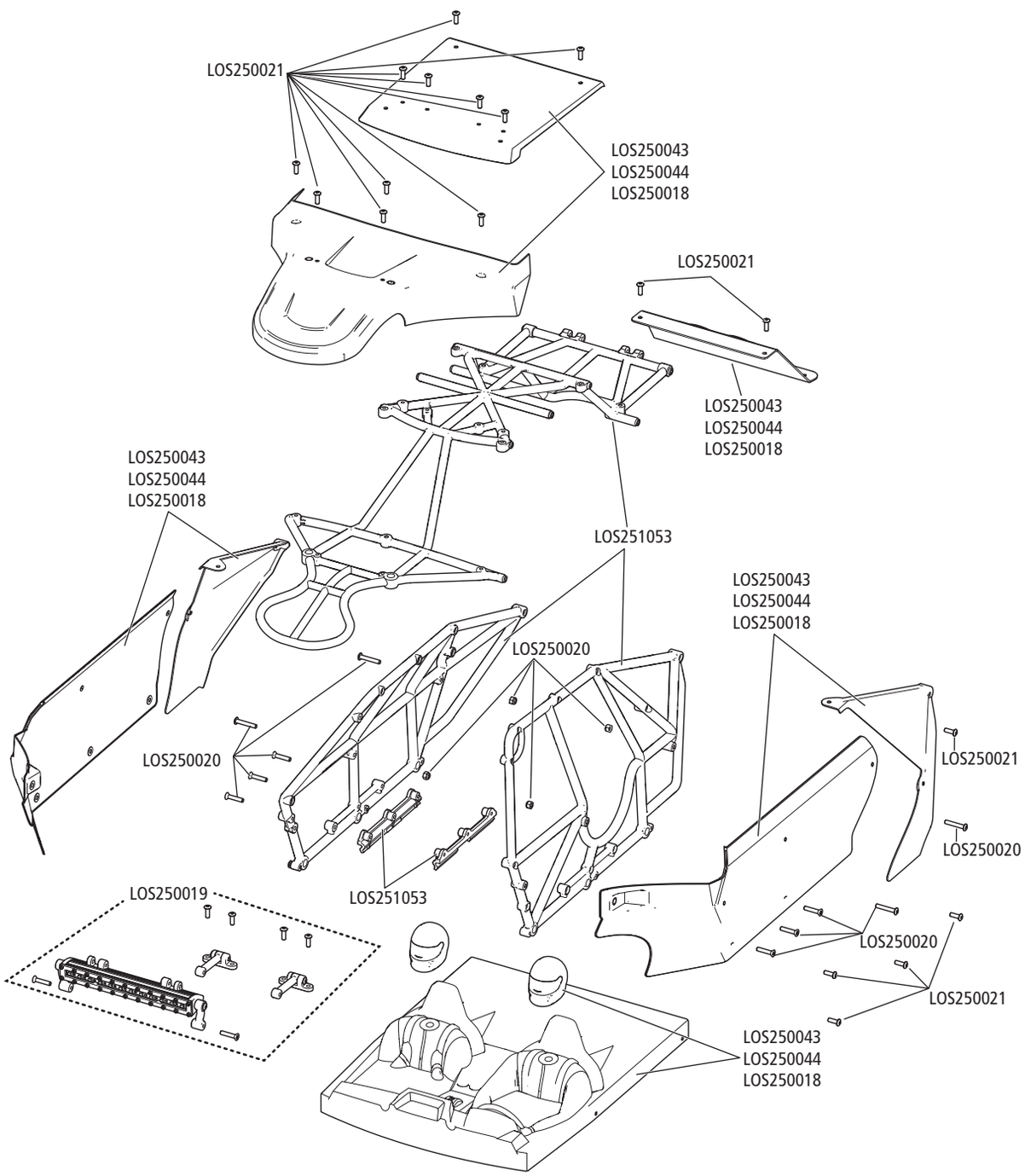

DESERT BUGGY XL-E 2.0

1/5-SCALE READY-TO-RUN

Setup Sheet-Stock

Name:	Date: Event:
City: State:	Track:

Track Conditions: ❑ Indoor ❑ Outdoor ❑ Tight ❑ Open ❑ Smooth ❑ Rough ❑ Hard Packed ❑ Loose/Loamy ❑ Blue Groove ❑ Dry ❑ Wet ❑ Dusty ❑ Grass ❑ Astro Turf ❑ Low Bite ❑ Med Bite ❑ High Bite ❑ Other _____

Front Suspension

Toe:	Out -1°	Spring:	Black
Ride Height:	Arms Level	Overall Shock Length:	161mm
Camber:	-1°	Camber Link:	#2
Caster:	Stock	Shock Location:	#2-Inside
Sway Bar:	4mm		
Piston/Oil:	2.0mm/40wt		

Notes: _____

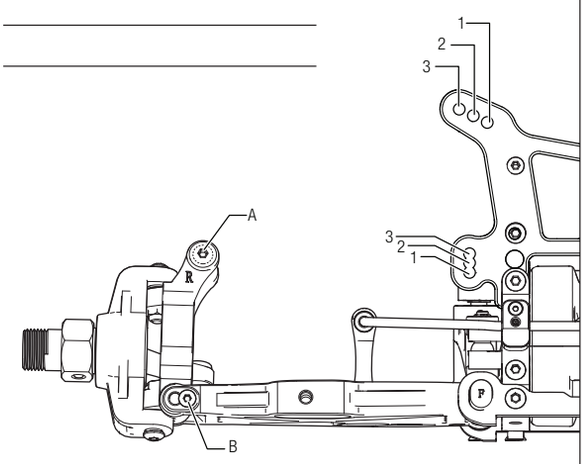

Differentials

Front	**Center**	**Rear**
Diff Fluid:	Diff Fluid:	Diff Fluid:
30,000 cs	50,000 cs	30,000 cs

Rear Suspension

Toe:	3°	Piston/Oil:	2.0mm/40 wt
Anti-Squat:	2°	Spring:	Black
Ride Height:	Arms Level	Overall Shock Length:	161mm
Camber:	-1°	Camber Link:	#1
Sway Bar:	4mm	Shock Location	#2-Inside

Notes: _____

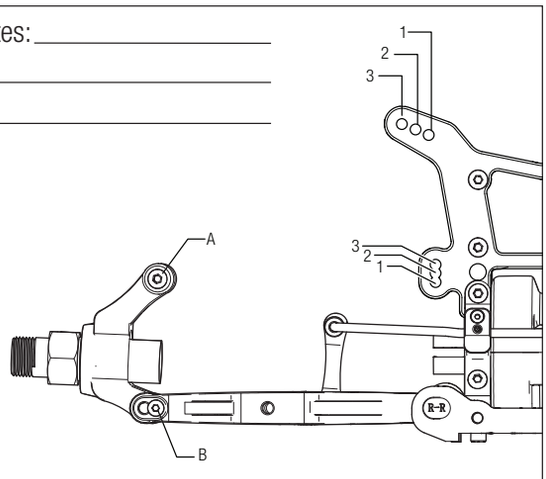

Tires

	Type	Compound	Insert
Front:	Stock	Stock	Stock
Rear:	Stock	Stock	Stock

Notes: _____

Electronics

Radio:	DX2E	Pinion:	13t
Servo:	Spektrum SPMS906	Spur:	50t
ESC:	SPMXSE1160 60A ESC	Battery:	14.8V 5000mAh 4S 50C (2)
Motor:	Spektrum 780kv - 4pole		

DESERT BUGGY XLE 2.0

1/5-SCALE READY-TO-RUN

Setup Sheet

Name:	Date: Event:
City: State:	Track:

Track Conditions
❑ Indoor ❑ Outdoor ❑ Tight ❑ Open ❑ Smooth ❑ Rough ❑ Hard Packed ❑ Loose/Loamy ❑ Blue Groove ❑ Dry ❑ Wet ❑ Dusty ❑ Grass ❑ Astro Turf ❑ Low Bite ❑ Med Bite ❑ High Bite ❑ Other _____

Front Suspension

Toe: _____ Spring: _____
Ride Height: _____ Overall Shock Length: _____
Camber: _____ Camber Link: _____
Caster: _____ Shock Location: _____
Sway Bar: _____
Piston/Oil: _____

Notes: _____

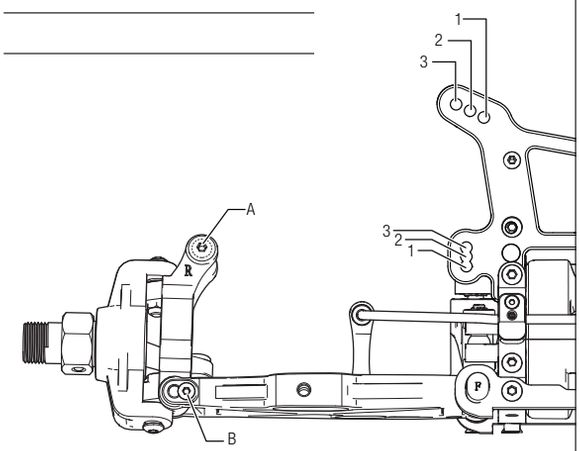

Differentials

Front	**Center**	**Rear**
Diff Fluid:	Diff Fluid:	Diff Fluid:
_____	_____	_____

Rear Suspension

Toe: _____ Piston/Oil: _____
Anti-Squat: _____ Spring: _____
Ride Height: _____ Overall Shock Length: _____
Camber: _____ Camber Link: _____
Sway Bar: _____ Shock Location _____

Notes: _____

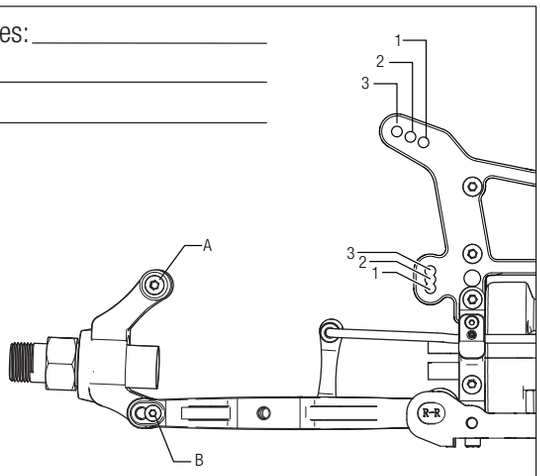

Tires

	Type	Compound	Insert
Front:	_____	_____	_____
Rear:	_____	_____	_____

Notes: _____

Electronics

Radio: _____ Pinion: _____
Servo: _____ Spur: _____
ESC: _____ Battery: _____
Motor: _____ _____

DESERT BUGGY XL-E 2.0

1/5-SCALE READY-TO-RUN

Setup Sheet

Name:	Date: Event:
City: State:	Track:

Track Conditions
❑ Indoor ❑ Outdoor ❑ Tight ❑ Open ❑ Smooth ❑ Rough ❑ Hard Packed ❑ Loose/Loamy ❑ Blue Groove ❑ Dry ❑ Wet ❑ Dusty ❑ Grass ❑ Astro Turf ❑ Low Bite ❑ Med Bite ❑ High Bite ❑ Other _____

Front Suspension

Toe: _____ Spring: _____
Ride Height: _____ Overall Shock Length: _____
Camber: _____ Camber Link: _____
Caster: _____ Shock Location: _____
Sway Bar: _____
Piston/Oil: _____

Notes: _____

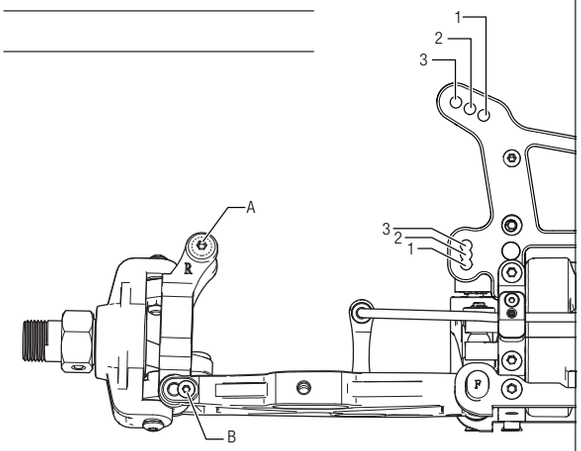

Differentials

Front	**Center**	**Rear**
Diff Fluid:	Diff Fluid:	Diff Fluid:
_____	_____	_____

Rear Suspension

Toe: _____ Piston/Oil: _____
Anti-Squat: _____ Spring: _____
Ride Height: _____ Overall Shock Length: _____
Camber: _____ Camber Link: _____
Sway Bar: _____ Shock Location _____

Notes: _____

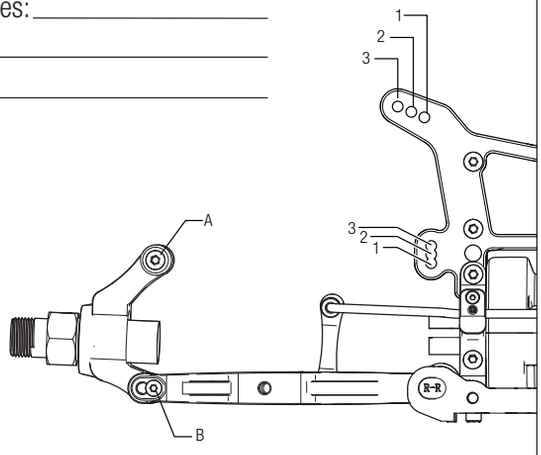

Tires

	Type	Compound	Insert
Front:	_____	_____	_____
Rear:	_____	_____	_____

Notes: _____

Electronics

Radio: _____ Pinion: _____
Servo: _____ Spur: _____
ESC: _____ Battery: _____
Motor: _____ _____

DESERT BUGGY XLE 2.0
1/5-SCALE READY-TO-RUN
Setup Sheet

Name: | Date: | Event:

City: | State: | Track:

Track Conditions: ❑ Indoor ❑ Outdoor | ❑ Tight ❑ Open | ❑ Smooth ❑ Rough | ❑ Hard Packed ❑ Loose/Loamy | ❑ Blue Groove ❑ Dry | ❑ Wet ❑ Dusty | ❑ Grass ❑ Astro Turf | ❑ Low Bite ❑ Med Bite | ❑ High Bite ❑ Other _____

Front Suspension

Toe: _____ Spring: _____

Ride Height: _____ Overall Shock Length: _____

Camber: _____ Camber Link: _____

Caster: _____ Shock Location: _____

Sway Bar: _____

Piston/Oil: _____

Notes: _____

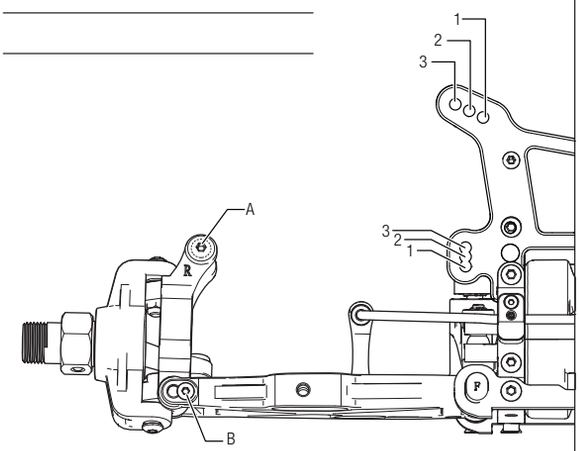

Differentials

Front	**Center**	**Rear**
Diff Fluid:	Diff Fluid:	Diff Fluid:
_____	_____	_____

Rear Suspension

Toe: _____ Piston/Oil: _____

Anti-Squat: _____ Spring: _____

Ride Height: _____ Overall Shock Length: _____

Camber: _____ Camber Link: _____

Sway Bar: _____ Shock Location _____

Notes: _____

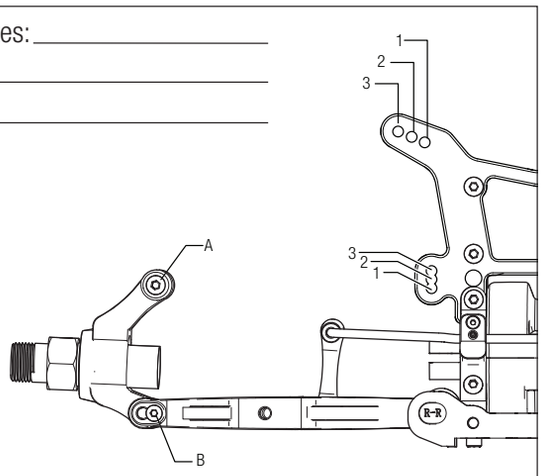

Tires

	Type	Compound	Insert
Front:	_____	_____	_____
Rear:	_____	_____	_____

Notes: _____

Electronics

Radio: _____ Pinion: _____

Servo: _____ Spur: _____

ESC: _____ Battery: _____

Motor: _____ _____

DESERT BUGGY XL-E 2.0

1/5-SCALE READY-TO-RUN

Setup Sheet

Name:	Date: Event:
City: State:	Track:

Track Conditions
❑ Indoor ❑ Outdoor ❑ Tight ❑ Open ❑ Smooth ❑ Rough ❑ Hard Packed ❑ Loose/Loamy ❑ Blue Groove ❑ Dry ❑ Wet ❑ Dusty ❑ Grass ❑ Astro Turf ❑ Low Bite ❑ Med Bite ❑ High Bite ❑ Other _____

Front Suspension

Toe: _____ Spring: _____
Ride Height: _____ Overall Shock Length: _____
Camber: _____ Camber Link: _____
Caster: _____ Shock Location: _____
Sway Bar: _____
Piston/Oil: _____

Notes: _____

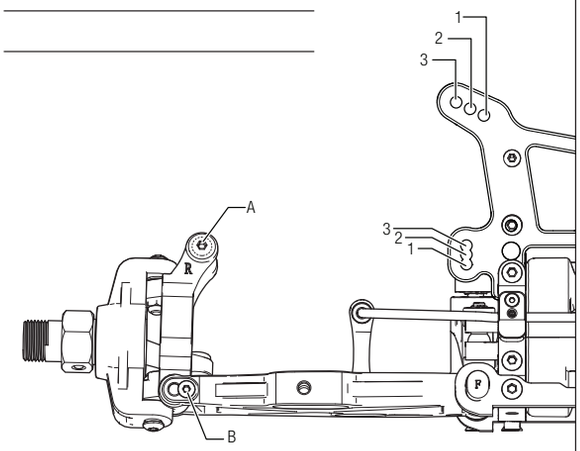

Differentials

Front	**Center**	**Rear**
Diff Fluid:	Diff Fluid:	Diff Fluid:
_____	_____	_____

Rear Suspension

Toe: _____ Piston/Oil: _____
Anti-Squat: _____ Spring: _____
Ride Height: _____ Overall Shock Length: _____
Camber: _____ Camber Link: _____
Sway Bar: _____ Shock Location _____

Notes: _____

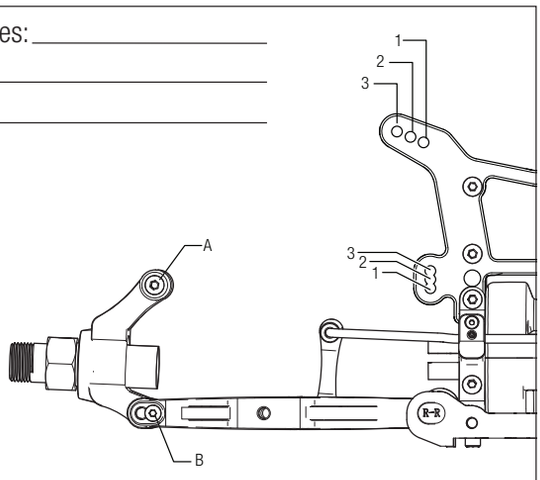

Tires

	Type	Compound	Insert
Front:	_____	_____	_____
Rear:	_____	_____	_____

Notes: _____

Electronics

Radio: _____ Pinion: _____
Servo: _____ Spur: _____
ESC: _____ Battery: _____
Motor: _____ _____

DESERT BUGGY XL-E 2.0™

1/5-SCALE READY-TO-RUN

WWW.LOSI.COM

©2021 Horizon Hobby, LLC.
Losi, Desert Buggy XL, Firma, DSM, DSM2, DSMR, AVC, Active Vehicle Control, Active, IC5, DX3, and the Horizon Hobby logo are trademarks or registered trademarks of Horizon Hobby, LLC. The Spektrum trademark is used with permission of Bachmann Industries, Inc. Fox, the Fox logo, and Maxxis are property of their respective owners and are used under license. US 9,320,977. US 10,528,060. US 9,930,567. US 10,419,970. US 10,849,013. Other patents pending.

Created 03/21 125266 LOS05020V2