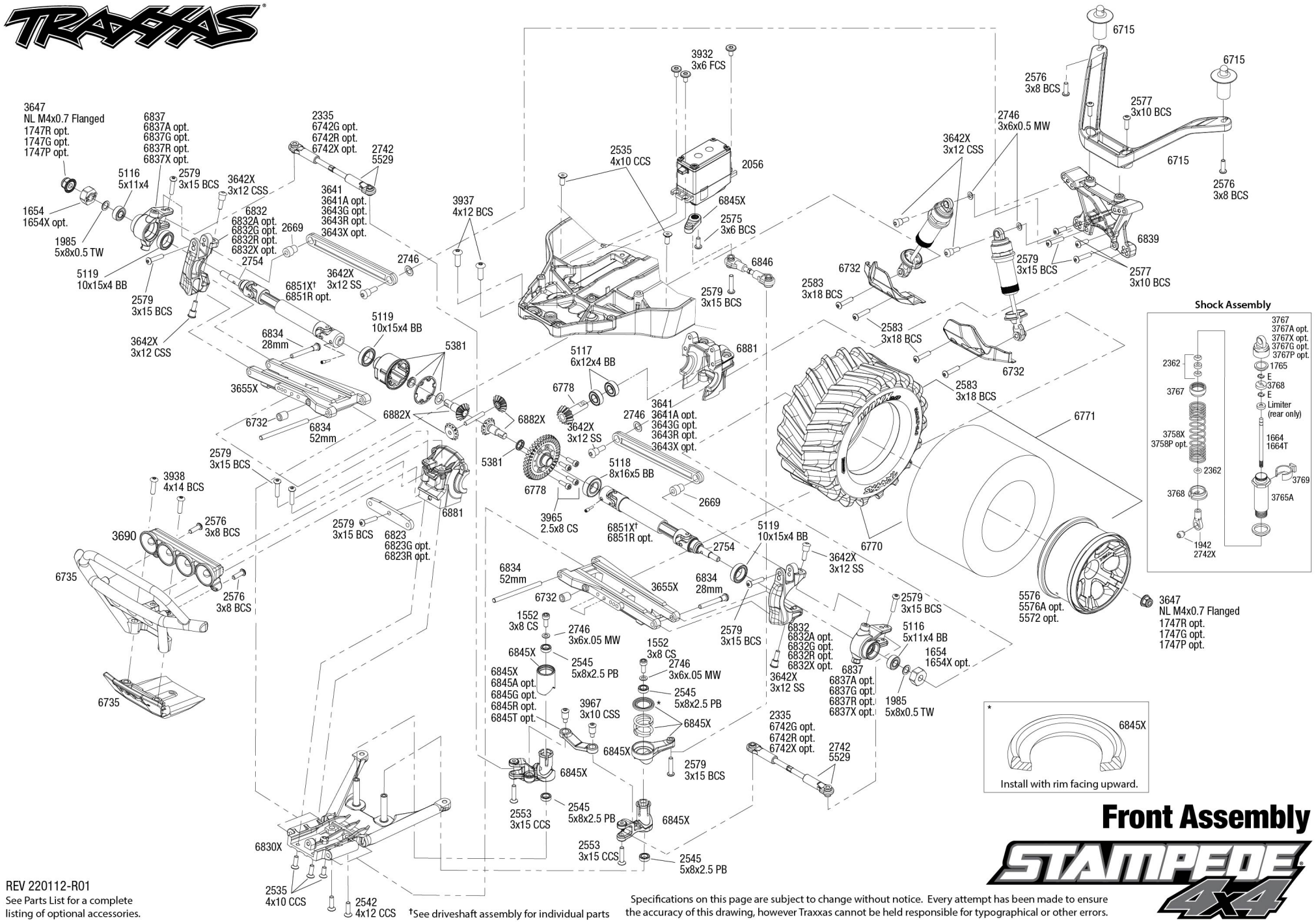

Front Assembly

STAMPEDE 4X4

REV 220112-R01

See Parts List for a complete listing of optional accessories.

†See driveshaft assembly for individual parts

Specifications on this page are subject to change without notice. Every attempt has been made to ensure the accuracy of this drawing, however Traxxas cannot be held responsible for typographical or other errors.

STAMPEDE 4x4
Rear Assembly

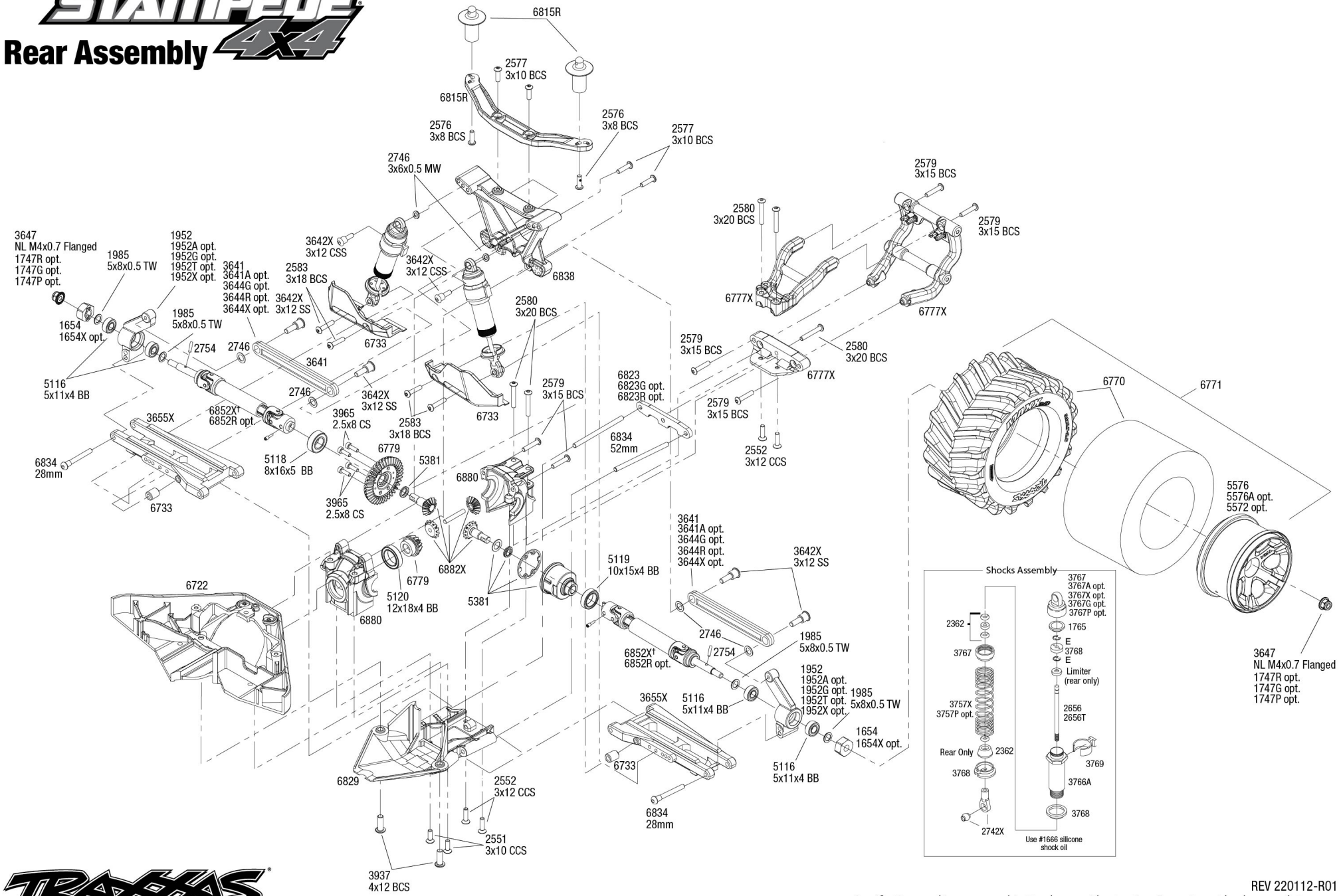

See Parts List for a complete listing of optional accessories.

REV 220112-R01

Specifications on this page are subject to change without notice. Every attempt has been made to ensure the accuracy of this drawing, however Traxxas cannot be held responsible for typographical or other errors.

STAMPEDE 4X4

Center Driveline Assembly

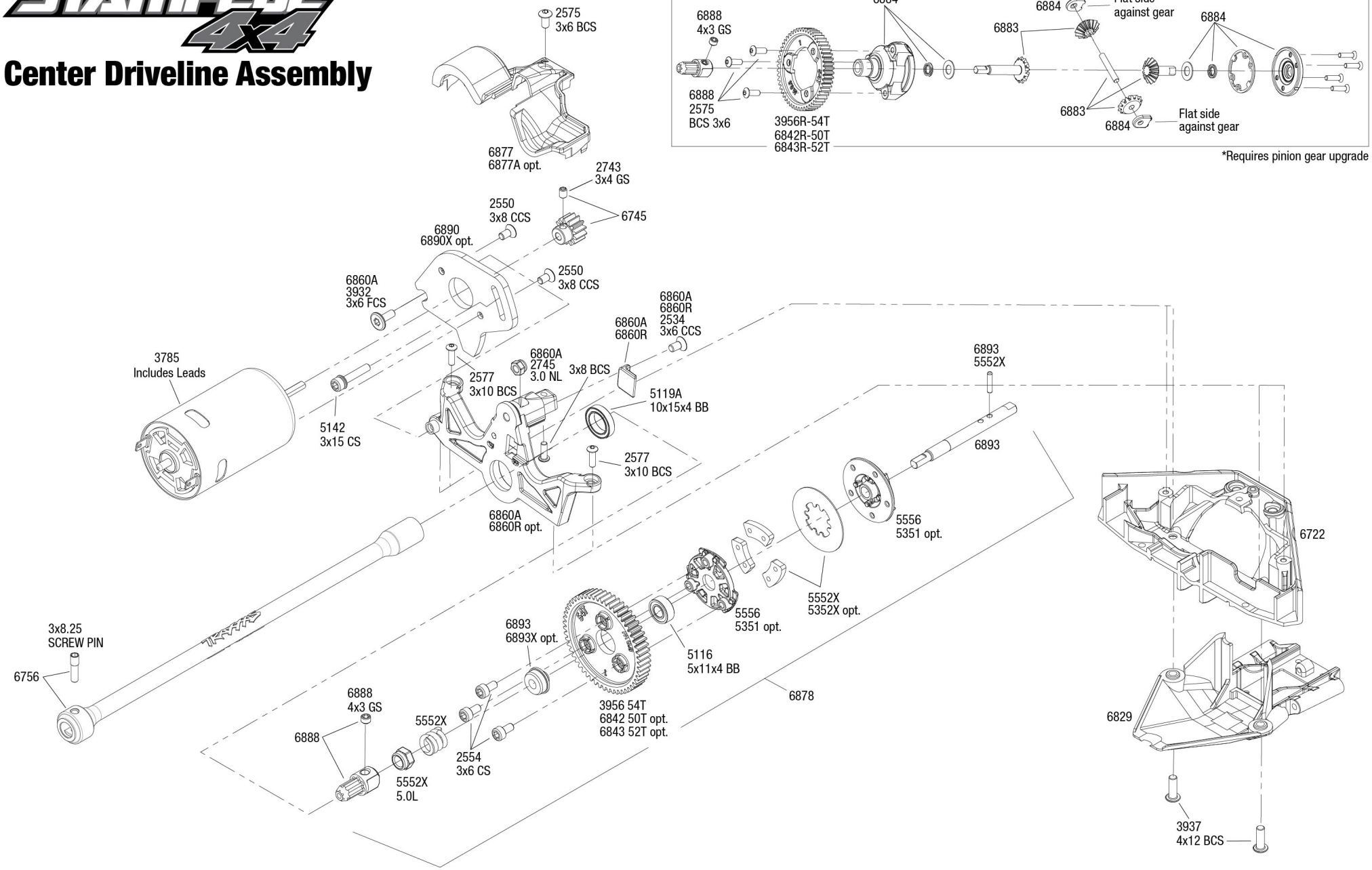

See Parts List for a complete listing of optional accessories.

REV 220112-R01

Specifications on this page are subject to change without notice. Every attempt has been made to ensure the accuracy of this drawing, however Traxxas cannot be held responsible for typographical or other errors.

Driveshaft Assembly

Rear Driveshaft Assembly

Available fully assembled as part #6852X

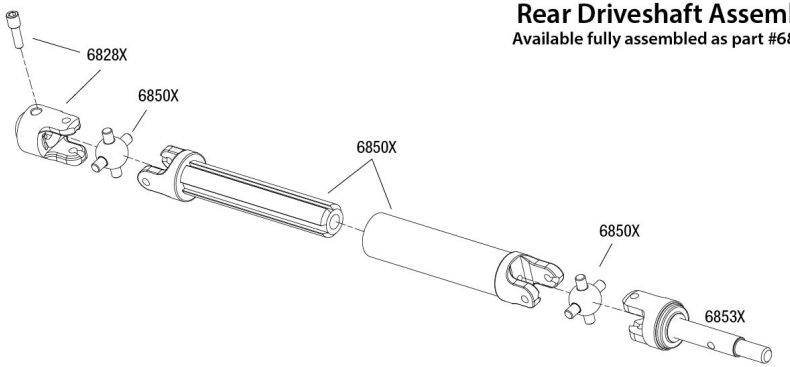

Front Driveshaft Assembly

Available fully assembled as part #6851X

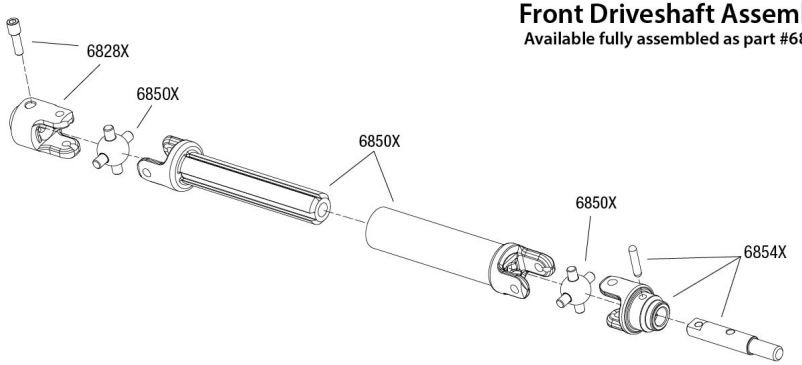

Modular Assembly

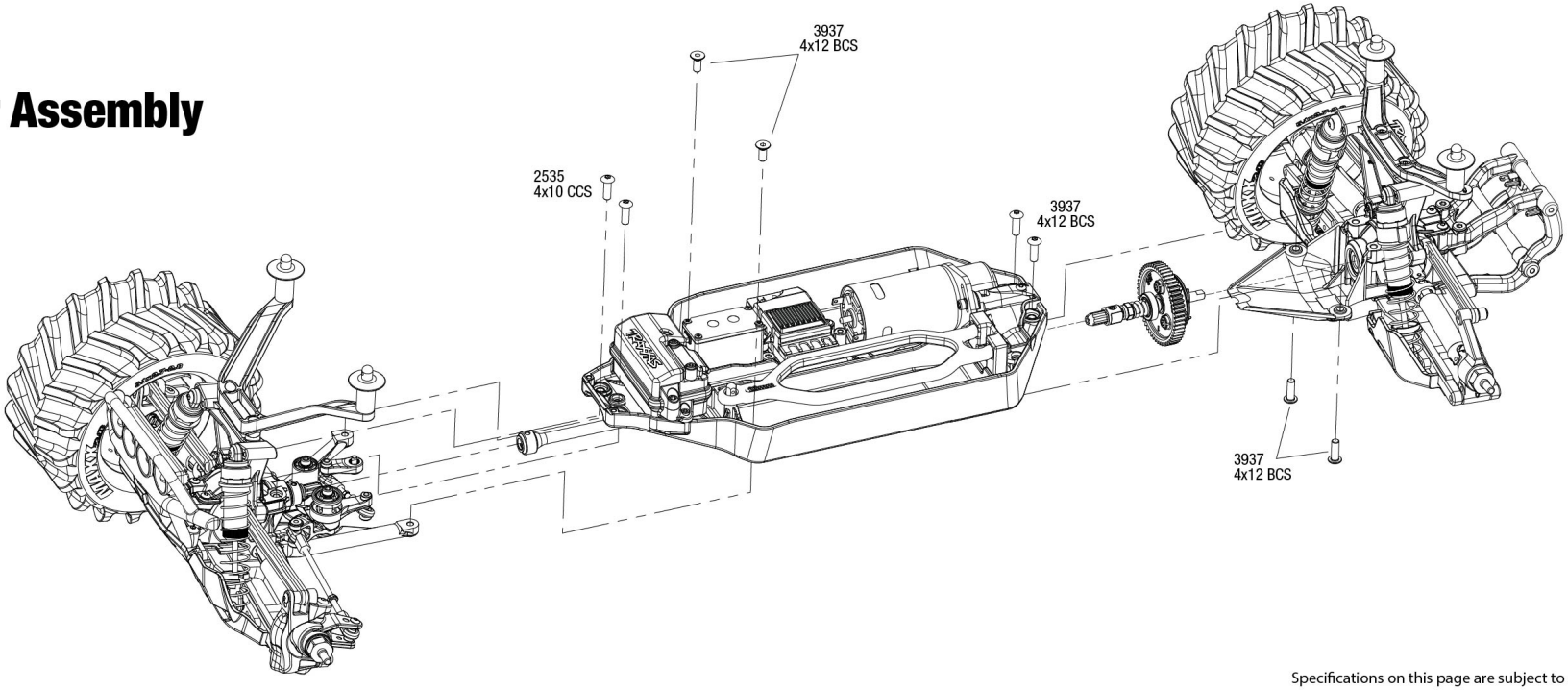

REV 220112-R01

Specifications on this page are subject to change without notice.
Every attempt has been made to ensure the accuracy of this drawing, however Traxxas cannot be held responsible for typographical or other errors. See Parts List for a complete listing of optional accessories.